TQ7403 Series

WIRELESS ACCESS POINTS

AT-TQ7403

AT-TQ7403-R

Installation Guide

613-003159 Rev. F

Copyright © 2026 Allied Telesis, Inc.
All rights reserved. No part of this publication may be reproduced without prior written permission from Allied Telesis, Inc.
Allied Telesis and the Allied Telesis logo are trademarks of Allied Telesis, Incorporated. All other product names, company names, logos or other designations mentioned herein are trademarks or registered trademarks of their respective owners.
Allied Telesis, Inc. reserves the right to make changes in specifications and other information contained in this document without prior written notice. The information provided herein is subject to change without notice. In no event shall Allied Telesis, Inc. be liable for any incidental, special, indirect, or consequential damages whatsoever, including but not limited to lost profits, arising out of or related to this manual or the information contained herein, even if Allied Telesis, Inc. has been advised of, known, or should have known, the possibility of such damages.

Contents

Preface **9**
Safety Symbols Used in this Document 10
Translated Safety Statements 11
Contacting Allied Telesis 12

Chapter 1: Product Description **13**
Hardware Components 14
Antennas 16
Cable Hide 16
Console Port 16
Power Switch 16
Kensington Lock Hole 17
Reset Button 17
PORT1 and PORT2 LAN Ports 18
Static Link Aggregation 18
Cascade Mode 19
Power Over Ethernet Plus (PoE+) 20
Connector Type 20
Speed 20
Duplex Mode 20
Automatic MDIX Detection 20
Cable Requirements 21
Maximum Distance 21
Port Pinouts 21
Guidelines 21
LEDs 22

Chapter 2: Installing the Wireless Access Point **25**
Reviewing Safety Precautions 26
Unpacking the Shipping Box 29
Reviewing Installation Guidelines 30
Allied OneConnect Onboarding Service 32
Installing the Access Point on a Table 33
Attaching the External Antennas to the Access Point 34
Overview to Installing the Access Point on a Wall or Ceiling 36
Pre-fitting the Mounting Bracket on the Access Point 37
Installing the Mounting Bracket on a Wall or Ceiling 40
Connecting Ethernet Cables to PORT1 and PORT2 44
Guidelines 44
Connecting the Ethernet Cables to LAN Ports 44
Connecting the AC Power Adapter 46
Attaching the Access Point to the Mounting Bracket 47
Installing an Anti-theft Device 50
Starting the First Management Session 51
Starting a Local Management Session 52

Chapter 3: Installing the TQ0301 Patch Antenna and TQ0064 Extension Cable **55**
Unpacking the TQ0301 Dual-band Patch Antenna 56

Unpacking the TQ0064 Extension Cable 58
Installing the TQ0301 Patch Antenna on a Pole 59
Guidelines for Pole Installation 59
Attaching the Cables to the TQ0301 Patch Antenna 61
Attaching the Cables to the TQ0301 Antenna 61
Attaching the Cables to the TQ7403 Series Access Point 62

Appendix A: Technical Specifications 63
Physical Specifications 63
Environmental Specifications 64
Power Specifications 64
External AC Adapter Specifications 64
PoE+ Power Requirements 65
Cable Specifications 65
LAN Ports Specifications and Pinouts 66
Port Specifications 66
Port Pinouts 66

Appendix B: Regulatory Statements 67
Federal Communication Commission Interference Statement 68
European Union Restriction of the Use of Certain Hazardous Substances (RoHS) in Electrical and Electronic Equipment 70
Industry Canada Statement 71
Europe - EU Declaration of Conformity 73
Operating Frequencies and Maximum Transmission Power Levels 73
Radiation Exposure Statement 73
Importer 73
UK - UKCA Declaration of Conformity 74
Operating Frequencies and Maximum Transmission Power Levels 74
Radiation Exposure Statement 74
Importer 74

Appendix C: Radiation Patterns 77
Antenna Locations and Axes 78
Radiation Patterns for BLE 78
Radiation Patterns for Wi-Fi 2.4GHz 79
Radiation Patterns for Wi-Fi 5GHz 79
Radiation Patterns for Wi-Fi 6GHz 80

Figures

Figure 1: Access Point Top View 14
Figure 2: Access Point Bottom View 14
Figure 3: Front Edge View 15
Figure 4: Back Edge View 15
Figure 5: Left Edge View 16
Figure 6: PORT1 and PORT2 in a Static LAG 18
Figure 7: PORT2 in Cascade Mode with an End Node 19
Figure 8: PORT2 in Cascade Mode with a Networking Device 19
Figure 9: Top View - LEDs 22
Figure 10: Approved and Unapproved Orientations on a Ceiling, Wall, or Table 31
Figure 11: Aligning the Antenna to the Access Point 34
Figure 12: Attaching the Antenna to the Access Point 34
Figure 13: Adjusting the Antenna Position 35
Figure 14: Attaching the Bracket Screws to the Access Point 37
Figure 15: Panel Screw 38
Figure 16: Attaching the Mounting Bracket on the Access Point 38
Figure 17: Removing the Mounting Bracket from the Access Point 39
Figure 18: Marking the Holes for the Key-Hole Slots 40
Figure 19: Installing Two Screws 41
Figure 20: Installing the Mount Bracket On the Screws 42
Figure 21: Pre-Drill Holes on Mounting Bracket 42
Figure 22: Securing the Mount Bracket 43
Figure 23: Connecting an Ethernet Cable to PORT1 44
Figure 24: Connecting the Ethernet Cable to PORT2 45
Figure 25: Connecting an AC Power Adapter to the Access Point 46
Figure 26: Installing the Access Point on the Mounting Bracket 47
Figure 27: Seating the Access Point on the Mounting Bracket 48
Figure 28: Tightening the Mounting Bracket Thumbscrew 48
Figure 29: Fitting the Cables in the Cable Hide 49
Figure 30: Kensington Lock Port Location 50
Figure 31: Login Prompt 51
Figure 32: User Exec Mode Prompt 53
Figure 33: TQ0301 Patch Antenna on a Pole 59
Figure 34: TQ7403 Series Access Point and TQ0301 Patch Antenna Configurations 60
Figure 35: Attaching the Cables to the Antenna Connectors 61
Figure 36: Attaching the cable to an Antenna Connector 62
Figure 37: Dimensions 63
Figure 38: Pin Layout for RJ45 Connector on LAN Port 66
Figure 39: Antenna Locations and Axes 78

Tables

Table 1. LED Status Information 22
Table 2. Shipping Box Components 29
Table 3. Components in the TQ0301 Patch Antenna Shipping Boxes 56
Table 4. Component in the TQ0064 Extension Cable Shipping Box 58
Table 5. Physical Specifications 63
Table 6. Environmental Specifications 64
Table 7. External AC/DC Adapter Specifications 64
Table 8. PoE+ Power Specifications on LAN Ports 65
Table 9. LAN Port Specifications 66
Table 10. Pin Signals for 100M/1G/2.5G Base-T Connectors 66

Preface

This guide contains the hardware installation instructions for the TQ7403 and TQ7403-R access points.

This preface contains the following sections:

- “Safety Symbols Used in this Document” on page 10
- “Translated Safety Statements” on page 11
- “Contacting Allied Telesis” on page 12

Safety Symbols Used in this Document

This document uses the following conventions.

Note
Notes provide additional information.

Caution
Cautions inform you that performing or omitting a specific action may result in equipment damage or loss of data.

Warning
Warnings inform you that performing or omitting a specific action may result in bodily injury.

Warning
Warnings inform you of hot surfaces.

Translated Safety Statements

Important: The ∽ indicates that a translation of the safety statement is available in a PDF document titled *Translated Safety Statements* on the Allied Telesis website at **www.alliedtelesis.com/library**.

Contacting Allied Telesis

If you need Allied Telesis technical support, visit **www.alliedtelesis.com/support**.

Chapter 1

Product Description

The sections in this chapter describe the hardware components of the TQ7403 Series access points:

- “Hardware Components” on page 14
- “PORT1 and PORT2 LAN Ports” on page 18
- “LEDs” on page 22

Hardware Components

The top view of a TQ7403 Series access point is illustrated in Figure 1.

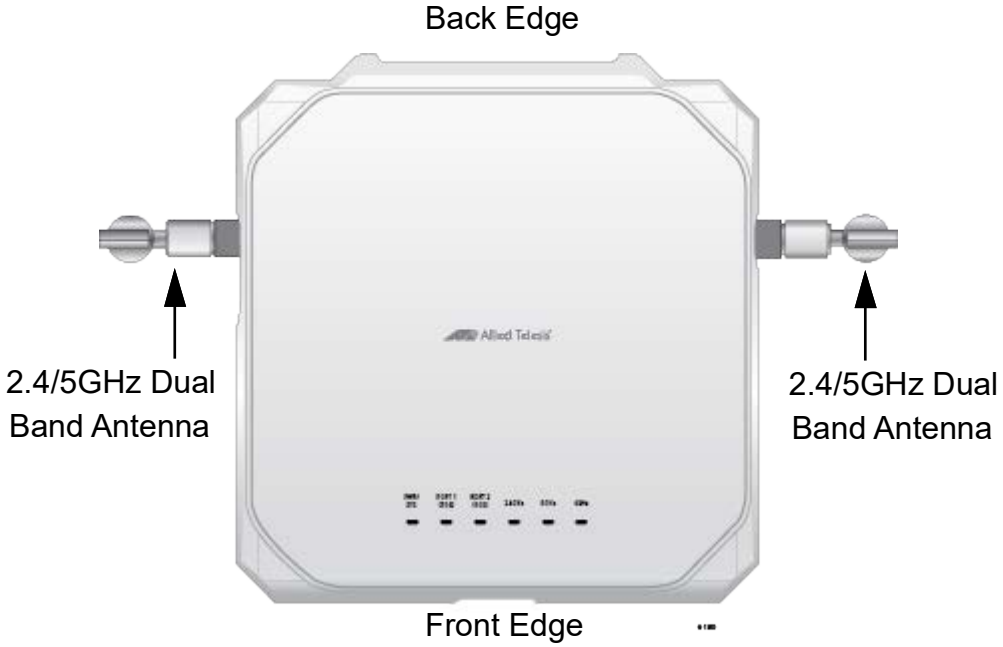

Figure 1. Access Point Top View

The bottom view is illustrated in Figure 2.

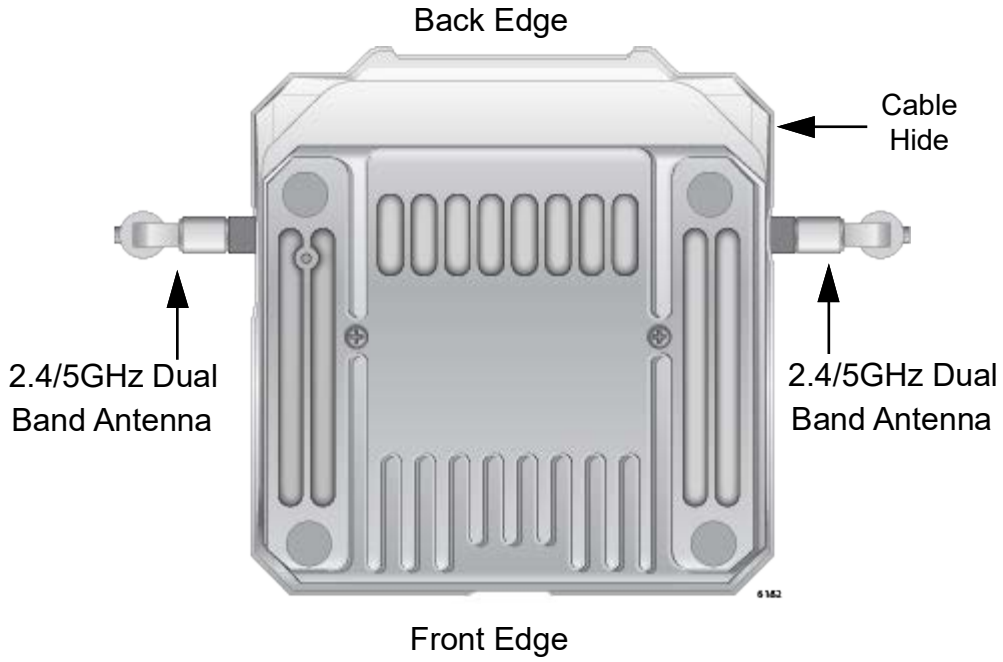

Figure 2. Access Point Bottom View

The front edge view is illustrated in Figure 3.

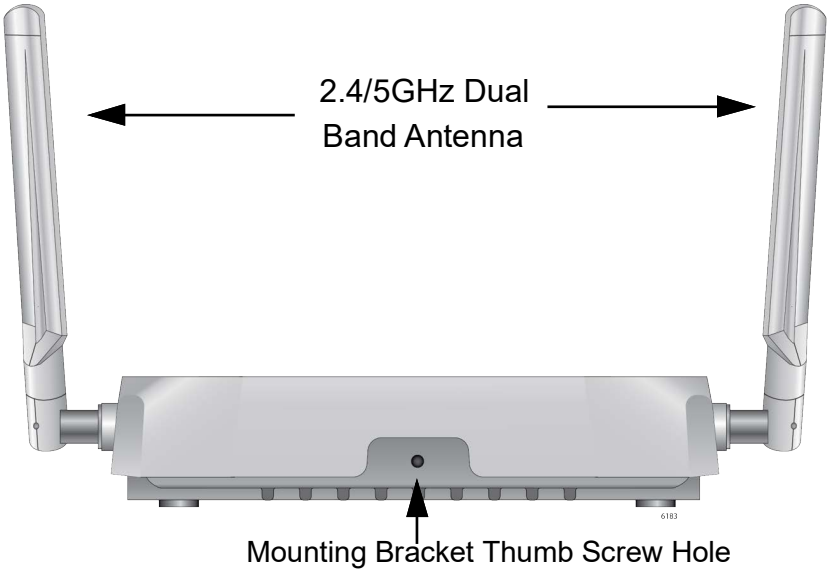

Figure 3. Front Edge View

The back edge view is illustrated in Figure 4.

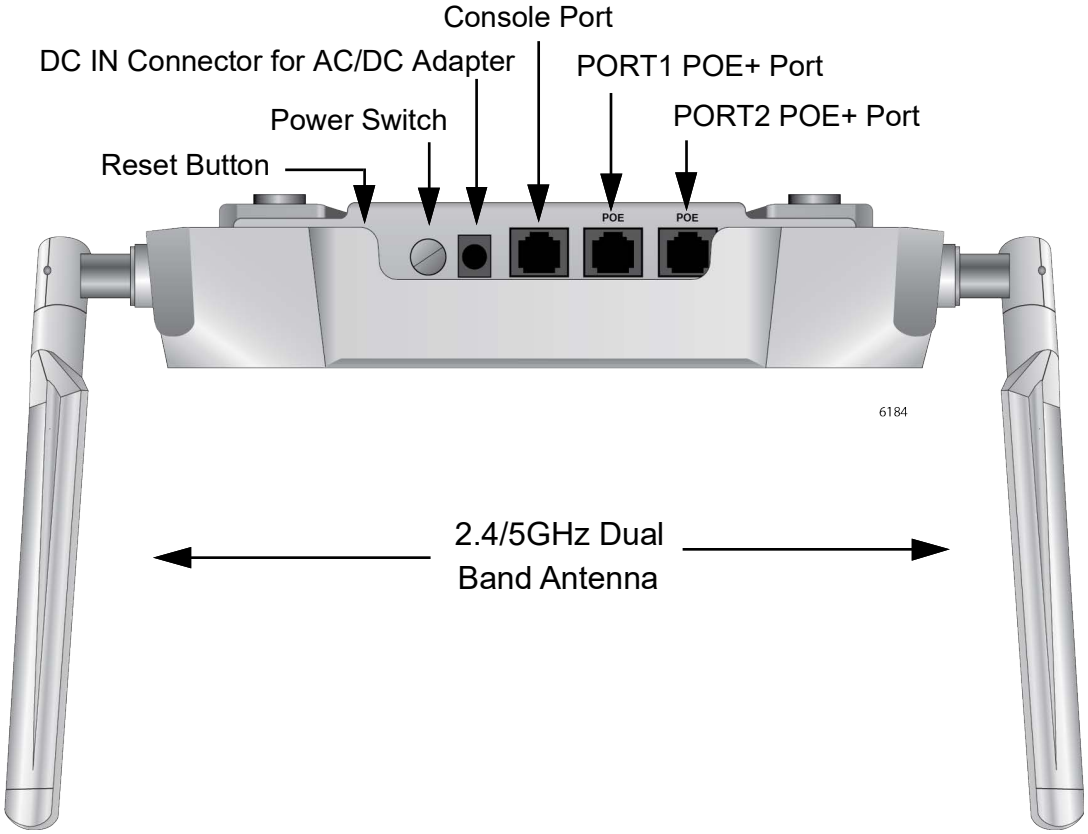

Figure 4. Back Edge View

The left edge view is illustrated in Figure 5.

Figure 5. Left Edge View

Antennas

The TQ7403 Series access point is embedded within two 2.4G Bluetooth® Low Energy/ 6G dual band antennas. In addition, the access point comes with two 2.4GHz/5GHz dual band external antennas.

Cable Hide

The top cover of the access point is larger than the access point chassis to create space on the back for cable connectors and cables shown in Figure 2 on page 14.

Console Port

On TQ7403-R access points, the console serial port on the back panel of the TQ7403-R is for console port communication. You can access the AlliedWarePlus™ operating system to configure the device from this port.

On TQ7403 access points, the console serial port is for manufacturing purposes only.

Power Switch

The Power Switch on the back panel in Figure 4 on page 15 turns ON or OFF the access point when power is supplied to the access point only from the AC adapter, not from PoE LAN ports.

When power is supplied to the access point from the PoE LAN ports, the state of the Power Switch does not affect the access point.

Kensington Lock Hole

The left panel has a hole for the Kensington lock to be connected to an anti-theft cable/lock to physically secure the access point as shown in Figure 5 on page 16.

Reset Button

The access point has a Reset button on the back edge in Figure 4 on page 15 for returning the parameter settings of the device to their default values. You might reset the access point if you want to discard its current configuration or if you forgot the manager password and so cannot manage the device.

To reset the device, press the button for five seconds and release.

You can enable or disable the reset button with the management software. The default setting for the button is enabled. If the access point is installed in a public area, you should probably disable it to protect the device from being reset by unauthorized individuals.

PORT1 and PORT2 LAN Ports

The wireless access point has two Ethernet ports, labeled PORT1 and PORT2. You use the ports to connect the wireless access point to your wired network. Here are their basic properties:

- PORT1 and PORT2 support PoE+.
- The default setting for PORT1 is enabled. You cannot disable it.
- The default setting for PORT2 is disabled.
- PORT1 and PORT2 can be combined into a static Link Aggregation (LAG) to double the bandwidth between the wireless access point and the wired network.
- PORT2 can be configured as a separate Ethernet port for another network device. This is referred to as the Cascade mode.

Static Link Aggregation

You can double the bandwidth between the wireless access point and your wired network by combining PORT1 and PORT2 ports into a static LAG. Static LAG functions as a single logical link between the wireless access point and another network device, such as an Ethernet switch or router. Static LAG also provides link redundancy. If one link goes down, the wireless access point maintains connectivity to the wired network over the remaining link. Refer to Figure 6.

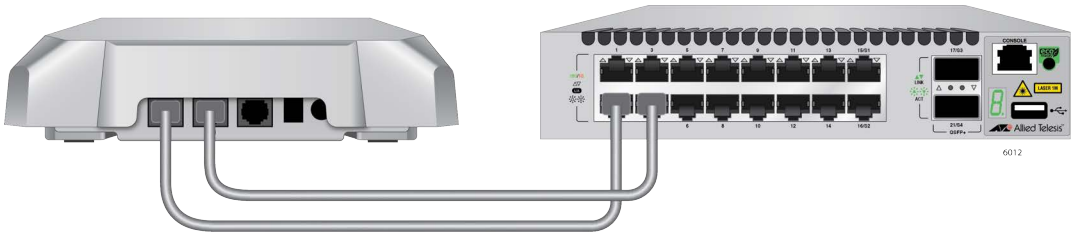

Figure 6. PORT1 and PORT2 in a Static LAG

Here are guidelines to using PORT1 and PORT2 as a static LAG:

- You have to connect the ports to the same network device, such as an Ethernet switch or router, or virtual stacking devices. Do not connect the LAN ports to different network devices.
- The network device has to support Static LAG.
- You have to configure the two ports on the network device as Static LAG.
- You activate Static LAG for PORT1 and PORT2 with the on-board web browser management interface.

Note
Do not enable and cable PORT2 until after you have configured the other network device for the static LAG.

Cascade Mode

The PORT2 also has a Cascade mode. The mode allows you to use the port to connect another device to your network. The device can be an end node such as a printer or computer, as shown in Figure 7.

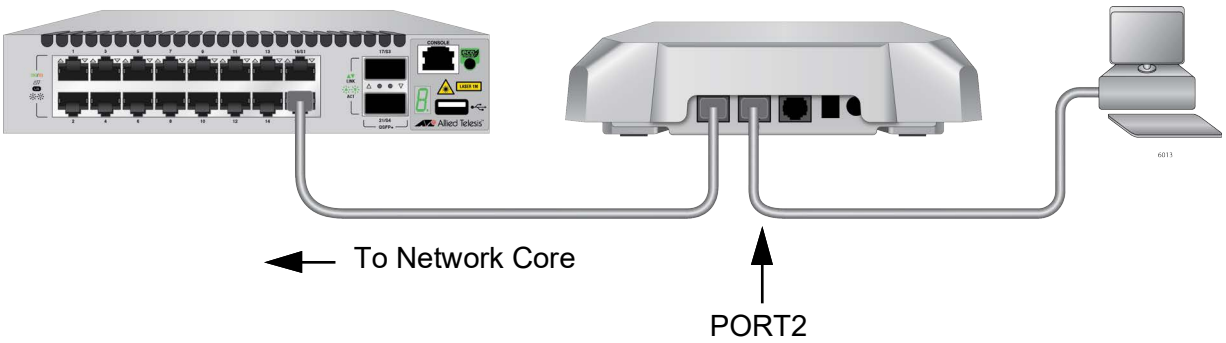

Figure 7. PORT2 in Cascade Mode with an End Node

It can also be a networking device such as a switch, router, or media converter. Refer to Figure 8.

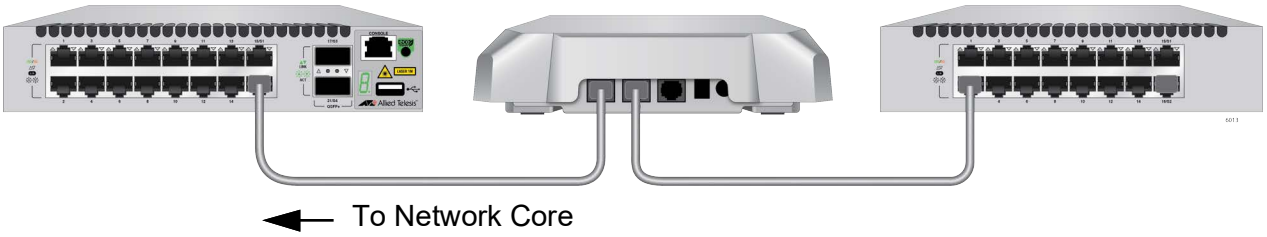

Figure 8. PORT2 in Cascade Mode with a Networking Device

Here are the Cascade mode guidelines:

- You set the Cascade mode with the on-board web browser management interface.
- The Cascade mode is not supported with Vista Manager EX and the AWC plug-in.
- Do not connect both PORT1 and PORT2 to the same network device when PORT2 is in the Cascade mode.

Power Over Ethernet Plus (PoE+)

You can power the wireless access point with either PoE+ on PORT1 or PORT2, or an AC/DC power adapter. The wireless access point is a PoE+ Class 4 powered device, with maximum power consumption of 25.5 watts. To power the device with PoE+, you have to connect PORT1 or PORT2 to PoE+ power sourcing equipment (PSE). The network cable connecting PORT1 or PORT2 to the PoE+ PSE carries both network traffic and PoE+.

You can power the device with both PoE+ and an AC/DC power adapter. However, the two power sources are not load sharing. The power adapter is the primary power source and PoE+ is redundant power.

Connector Type

The PORT1 and PORT2 LAN ports have an eight-pin RJ45 connector. The port uses four pins of the connector at 100 Mbps and all eight pins at 1G/2.5Gbps. Refer to the tables in “Port Pinouts” on page 66 for the pin assignments.

Speed

The PORT1 and PORT2 LAN ports have speeds of 100Mbps/1G/2.5Gbps. The speeds are set automatically with Auto-Negotiation. You cannot disable Auto-Negotiation on the ports.

Note
The LAN ports should be connected to network devices that also adjust port speeds with Auto-Negotiation. If a network device does not support Auto-Negotiation, the LAN ports operate at 100 Mbps, which may reduce network performance.

Duplex Mode

Both PORT1 and PORT2 LAN ports can operate in either half- or full-duplex mode at 100Mbps, and full-duplex mode at 1G/2.5Gbps. The ports are IEEE802.3u compliant and use Auto-Negotiation to set the duplex mode. You cannot disable Auto-Negotiation on the port.

Note
The network device to which you connect the PORT1 and PORT2 LAN ports should also set the duplex mode with Auto-Negotiation. If a network device does not support Auto-Negotiation, the LAN port operates at half-duplex mode. This may result in a duplex mode mismatch if the network device is operating at full duplex.

Automatic MDIX Detection

When operating at 100Mbps, the twisted-pair ports feature automatic MDIX detection. (Automatic MDIX detection does not apply to 1G/2.5Gbps.) This feature automatically configures the ports to MDI or MDI-X depending on the wiring configuration of the port on the Ethernet switch.

You cannot disable automatic MDIX detection. For automatic MDIX detection to work properly, this feature must also be present on the Ethernet switch. The LAN port defaults to MDIX if it is connected to a network device that does not support automatic MDIX detection.

Cable Requirements

The minimum cable requirements for the ports are listed here.

- ❐ 100 Mbps port: Standard TIA/EIA 568-B-compliant Category 3 shielded or unshielded cabling.
- ❐ 1/2.5Gbps port: Standard TIA/EIA 568-A-compliant Category 5 or TIA/EIA 568-B-compliant Enhanced Category 5 (Cat 5e) unshielded cabling.

Maximum Distance

The PORT1 and PORT2 LAN ports have a maximum operating distance of 100 meters (328 feet).

Port Pinouts

See Table 10 on page 66 for port pinouts information.

Guidelines

Here are the guidelines to using PORT1 and PORT2:

- ❐ If you are connecting only one LAN port to your network, you have to use PORT1.
- ❐ The default setting for PORT1 is enabled. You cannot disable it.
- ❐ The default setting for PORT2 is disabled. To activate it, use the on-board web browser management interface.
- ❐ To use PORT1 and PORT2 as a static LAG, you have to connect them to the same network device, such as an Ethernet switch or router, or virtual stacking devices. Do not connect the LAN ports to different network devices. The network device has to support static LAG.

Caution

When using PORT1 and PORT2 as a static LAG, do not activate PORT2 until you have configured the ports on the network device to which the LAN ports are connected as a static LAG. Refer to the documentation for the network device for instructions.

- ❐ To activate the Cascade mode for PORT2, use the on-board web browser management interface.

LEDs

The LEDs on the top panel display status information. See Figure 9 for LEDs and Table 1 for the status definition.

Figure 9. Top View - LEDs

Table 1. LED Status Information

LED	State	TQ7403-R	TQ7403
PWR/ SYS	Green	The access point is powered ON and operating normally.	
	Blinking Green	N/A	The access point is booting up.
	Red	TQ7403-R is booting up.	The access point has encountered an error.
	Blinking Red	N/A	The access point is upgrading its firmware.
	Off	The access point is not receiving power.	
PORT1 (PoE)	Green	The port has established a link to a network device.	
	Blinking Green	The port is transmitting or receiving data.	
	Off	The port has not established a link to a network device.	
PORT2 (PoE)	Green	The port has established a link to a network device.	
	Blinking Green	The port is transmitting and receiving data.	
	Off	The port has not established a link to a network device.	
2.4GHz	Green	The 2.4GHz radio is enabled.	
	Off	The 2.4GHz radio is disabled.	
5GHz	Green	The 5GHz radio is enabled.	
	Off	The 5GHz radio is disabled.	

Table 1. LED Status Information (Continued)

LED	State	TQ7403-R	TQ7403
6GHz	Green	The 6GHz radio is enabled.	
	Off	The 6GHz radio is disabled.	

Chapter 2

Installing the Wireless Access Point

This chapter contains the installation procedures for the TQ7403 Series access point. The procedures are detailed in the following sections:

- ❒ “Reviewing Safety Precautions” on page 26
- ❒ “Unpacking the Shipping Box” on page 29
- ❒ “Reviewing Installation Guidelines” on page 30
- ❒ “Allied OneConnect Onboarding Service” on page 32
- ❒ “Installing the Access Point on a Table” on page 33
- ❒ “Attaching the External Antennas to the Access Point” on page 34
- ❒ “Overview to Installing the Access Point on a Wall or Ceiling” on page 36
- ❒ “Pre-fitting the Mounting Bracket on the Access Point” on page 37
- ❒ “Installing the Mounting Bracket on a Wall or Ceiling” on page 40
- ❒ “Connecting Ethernet Cables to PORT1 and PORT2” on page 44
- ❒ “Connecting the AC Power Adapter” on page 46
- ❒ “Attaching the Access Point to the Mounting Bracket” on page 47
- ❒ “Installing an Anti-theft Device” on page 50
- ❒ “Starting the First Management Session” on page 51

Note
The non-US models of this product have a country code setting that must be set during the initial management session of the units. The setting ensures that the units operate in compliance with the laws and regulations of your country or region.

For the US model, the country code is preset and cannot be changed. Per FCC regulations, the country code setting for all WiFi products marketed in the US must be fixed to US operational channels only.

Reviewing Safety Precautions

Review the following safety precautions before installing the access point.

Important: Safety statements that have the ✍ symbol are translated into multiple languages in the *Translated Safety Statements* document, which is available at **www.alliedtelesis.com/library**.

Warning
To prevent electric shock, do not remove the cover. No user-serviceable parts inside. This unit contains hazardous voltages and should only be opened by a trained and qualified technician. To avoid the possibility of electric shock, disconnect electric power to the product before connecting or disconnecting the LAN cables. ✍ **E1**

Warning
Do not work on equipment or cables during periods of lightning activity. ✍ **E2**

Warning
All Countries: Install product in accordance with local and National Electrical Codes. ✍ **E8**

Warning
Only trained and qualified personnel are allowed to install or to replace this equipment. ✍ **E14**

Warning
To reduce the risk of electric shock, the PoE ports on this product must not connect to cabling that is routed outside the building where this device is located. ✍ **E40**

Warning
This equipment shall be installed in a Restricted Access location. ✍ **E45**

Warning
FCC Caution: Any changes or modifications not expressly approved by the party responsible for compliance could void the user's authority to operate this equipment. **E80**

Note
The access point must be powered by:

1. A UL listed external AC/DC power supply suitable for use at Tma 45°C, a maximum operating altitude of 3000 m or higher, and whose output meets separated extra-low voltage (SELV), limited power sources (LPSs) and is rated 12 VDC, 4.0 A,

OR

2. By Power over Ethernet through a UL listed ITE. Refer to Table 7, “External AC/DC Adapter Specifications” on page 64.

Caution
Air vents must not be blocked and must have free access to the room ambient air for cooling. E6

Warning
An operational unit can be hot. Exercise caution when handling with unprotected hands.

Warning
Operating Temperature. This product is designed for a maximum ambient temperature of 50°C (122° F) E7.

Warning
To reduce the risk of electric shock, the PoE port on this product must not connect to cabling that is routed outside the building where this device is located. E40

Warning
This equipment is intended for indoor use only. E95

Note
If you are not using PoE to power to unit, use only an approved AC/DC adapter. Refer to “Power Specifications” on page 64.

Caution
The unit does not contain serviceable components. Please return damaged units for servicing. E42

Note
You should verify that your PoE network adheres to the standards of a separated extra-low voltage (SELV) circuit before using the PoE feature on the wireless access point.

Unpacking the Shipping Box

To verify the contents of the shipping box, perform the following procedure:

1. Remove all components from the shipping box.

> **Note**
> Store the packaging material in a safe location. Use the original shipping material if you need to return the device to Allied Telesis.

2. Verify the contents of the shipping box listed in Table 2. If any item is missing or damaged, contact your Allied Telesis sales representative for assistance.

Table 2: Shipping Box Components

Name	Component
TQ7403 Series Access Point	
Two 2.4GHz/5GHz dual band external antennas	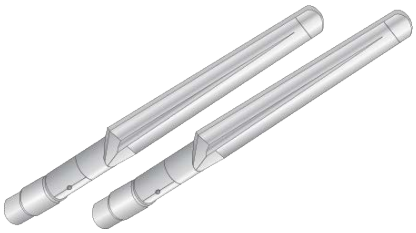
One Mounting Bracket	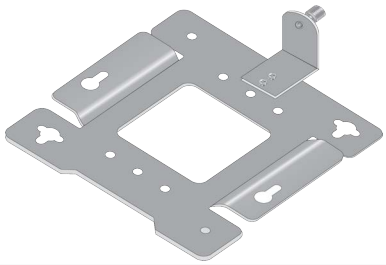
Two M5 x 4.5 mm, Pan-head Screws	

Reviewing Installation Guidelines

Review the following guidelines before installing the access point:

- The ceiling or wall mounting surface must be of proper material to accommodate the screws and strong enough to support the weight of the access point and cables. (Refer to Table 5 on page 63 for the product weight.)
- You can install the access point on a wall where Cisco or Fortinet bracket has already been installed. You need a bracket converter. See “the *BRKT-CONV-AP1 Bracket Converter Installation Guide*” on **www.alliedtelesis.com/library** for more information.
- Connect the Ethernet cable(s) and power cord (if applicable) to the access point before installing the product on the ceiling or wall. Depending on the installation location, connecting or removing cables may be difficult after the device is installed.
- Verify that the Ethernet cable(s) is long enough to connect to its destination port(s) before installing the access point. Once the installation is complete, it is physically difficult to change the cables.
- If the wireless access point is powered by an AC adapter, verify that an AC power outlet is within six feet of the planned installation site. (Refer to “Power Specifications” on page 64 for the AC adapter specifications.)
- On a wall, the access point must be installed horizontally or vertically.
- Refer to Figure 10 on page 31 for approved and unapproved orientations of the wireless access point on a table, wall, or ceiling.

Ceiling Installation

Wall Installation

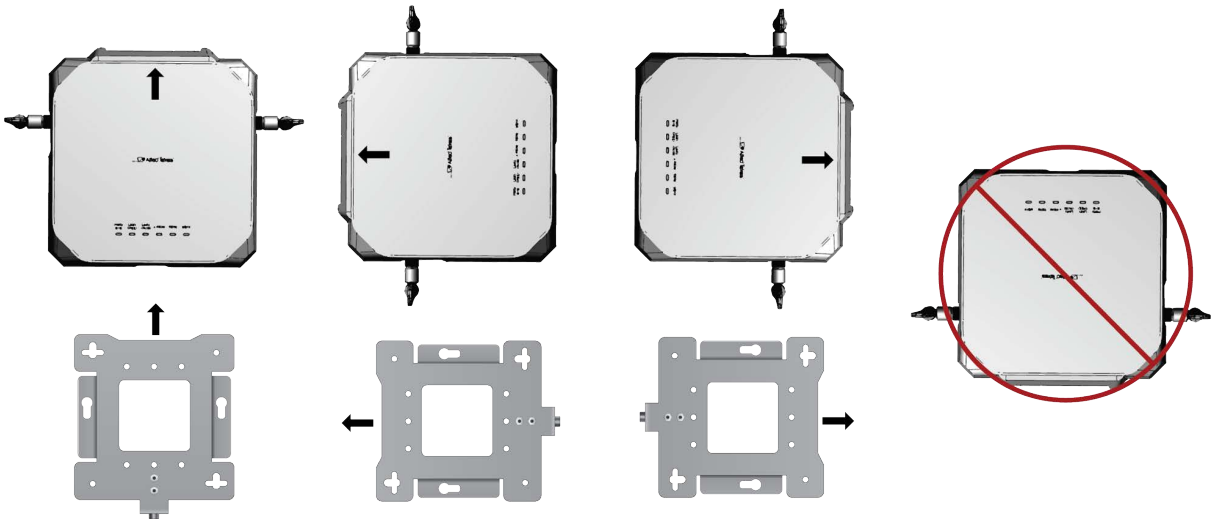

Table Installation

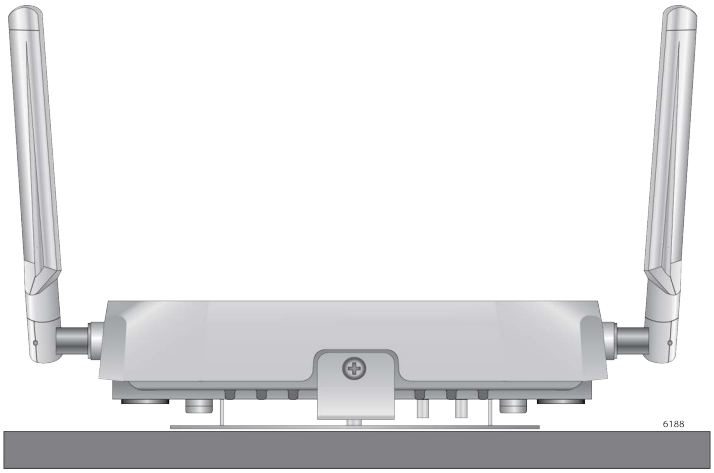

Figure 10. Approved and Unapproved Orientations on a Ceiling, Wall, or Table

Allied OneConnect Onboarding Service

The AT-TQ7403-R model is part of the TQR Series.

The TQR Series features the OneConnect Onboarding service from Allied Telesis. The service automatically configures managed Allied Telesis products by downloading customized configuration packages from a regional cloud-based OneConnect Onboarding server.

Please read the following before powering on the device:

- The access point automatically starts the OneConnect Onboarding service when it receives an IPv4 address from a DHCP server. The port and system LEDs will begin flashing after connecting with the cloud-based service and starting the download process.
- The access point automatically disables the OneConnect Onboarding service if it is not registered with the service.
- OneConnect Onboarding uses SZTP, NTP, DHCP, and DNS to contact its cloud-based server.

For information on Allied OneConnect Onboarding, consult your Allied Telesis Partner or refer to the *Allied* OneConnect Onboarding *Installation Guide* on the Allied Telesis web site at **www.alliedtelesis.com/library**.

Installing the Access Point on a Table

You need the following items to install the access point on a table:

- ❒ TQ7403 Series Access Point
- ❒ One or two Ethernet cables
- ❒ External AC power adapter (Optional if using PoE+. Required if not using PoE+ or for redundant power.)
- ❒ Kensington lock (optional)

Note
See “Reviewing Safety Precautions” on page 26 and “Reviewing Installation Guidelines” on page 30 before installing the product.

Perform the following steps to install the wireless access point on a table:

1. Attach the external antennas to the access point.

   See “Attaching the External Antennas to the Access Point” on page 34.

2. Place the access point at the selected location on the table.

3. Connect Ethernet cables to PORT1 and PORT2 ports.

   See “Connecting Ethernet Cables to PORT1 and PORT2” on page 44.

4. To connect an AC power adapter to the access point, go to “Connecting the AC Power Adapter” on page 46.

5. To install a security cable, refer to “Installing an Anti-theft Device” on page 50.

6. To start managing the device, go to “Starting the First Management Session” on page 51.

Attaching the External Antennas to the Access Point

The TQ7403 Series access point comes with two 2.4GHz/5GHz dual band external antennas. To install the external antennas, perform the following procedure:

1. Place the access point on a level, secure surface.
2. Align the antenna to the antenna connector on the side of the access point. See Figure 11.

Figure 11. Aligning the Antenna to the Access Point

3. Screw the antenna onto the antenna connector. See Figure 12.

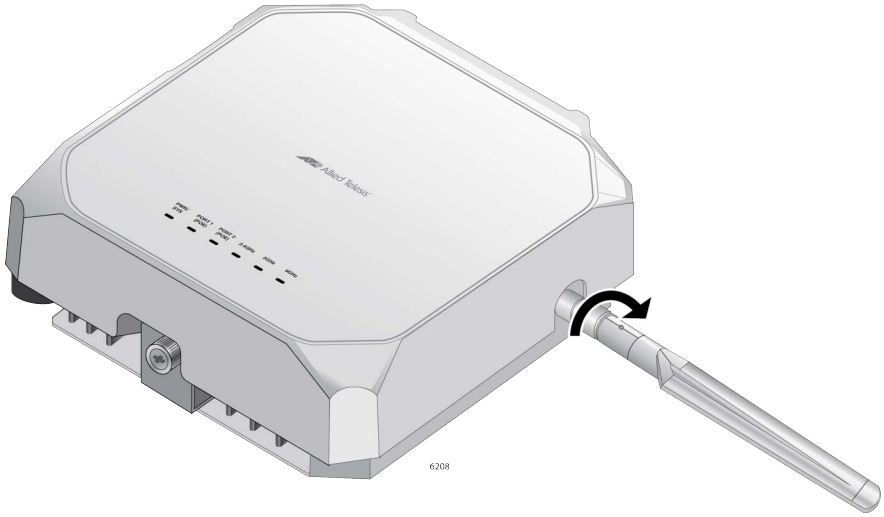

Figure 12. Attaching the Antenna to the Access Point

4. Bend the antenna to adjust the position. See Figure 13.

Figure 13. Adjusting the Antenna Position

5. Repeat Step 2 to Step 4 to attach the other antenna to the other side of the access point.

Overview to Installing the Access Point on a Wall or Ceiling

Here are the procedures for installing the wireless access point on a wall or ceiling:

- ❒ “Pre-fitting the Mounting Bracket on the Access Point” on page 37
- ❒ “Installing the Mounting Bracket on a Wall or Ceiling” on page 40
- ❒ “Connecting Ethernet Cables to PORT1 and PORT2” on page 44
- ❒ “Connecting the AC Power Adapter” on page 46
- ❒ “Attaching the Access Point to the Mounting Bracket” on page 47
- ❒ “Installing an Anti-theft Device” on page 50

Note
See “Reviewing Safety Precautions” on page 26 and “Reviewing Installation Guidelines” on page 30 before installing the product.

Note
Depending on the installation location, it may be easier to connect the network cables and optional power adapter to the wireless access point before installing it on the wall or ceiling.

You need the following items to install the wireless access point on a ceiling or wall:

- ❒ TQ7403 Series Access Point
- ❒ Two screws to attach the access point to the mounting bracket
- ❒ Mounting bracket
- ❒ Four M4x25mm flat-head wood screws and anchors (not provided) for fastening the mounting bracket
- ❒ Phillips head screwdriver (not provided)
- ❒ Pencil (not provided)
- ❒ External AC power adapter (Optional if using PoE+. Required if not using PoE+ or for redundant power.)
- ❒ Kensington lock (optional and not provided)

Note
The four Phillips head M4 screws/anchors, the Phillips head screwdriver, pencil, external AC power adapter and Kensington lock are *not* included with the product.

Pre-fitting the Mounting Bracket on the Access Point

To pre-fit the mounting bracket on the access point, perform the following procedure:

1. Attach the external antennas to the access point.

   See “Attaching the External Antennas to the Access Point” on page 34.

2. Place the wireless access point upside down on a stable flat surface, where the antennas are free from any surface not to get damaged.

3. Install the two screws (provided) fully into the bottom panel of the access point. See Figure 14.

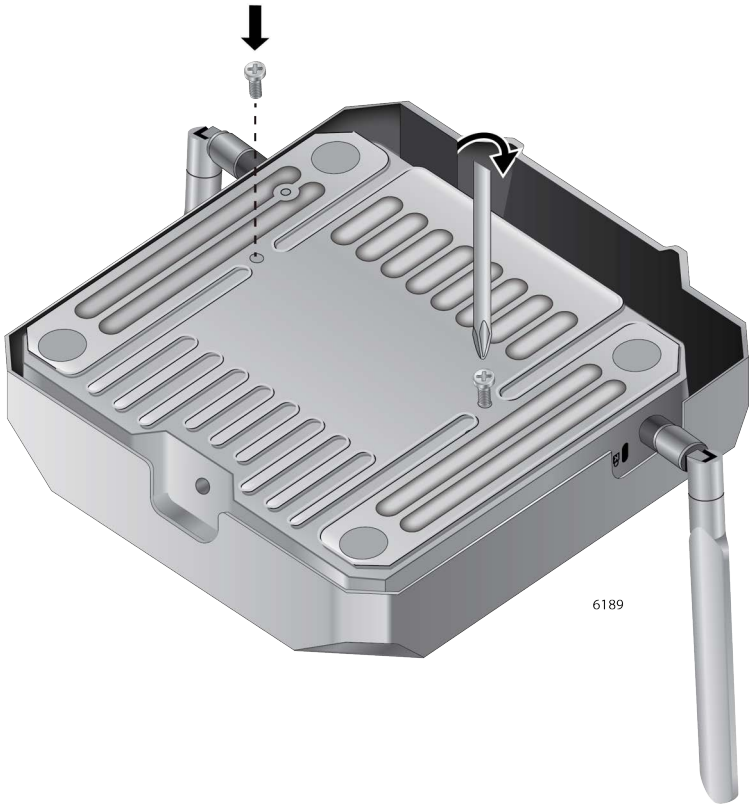

Figure 14. Attaching the Bracket Screws to the Access Point

The screw collar provides the proper spacing for the mounting bracket beneath the screw head. See Figure 15 on page 38.

Figure 15. Panel Screw

4. Make sure that the mounting bracket fits to the access point by sliding the bracket beneath the screws as shown in Figure 16.

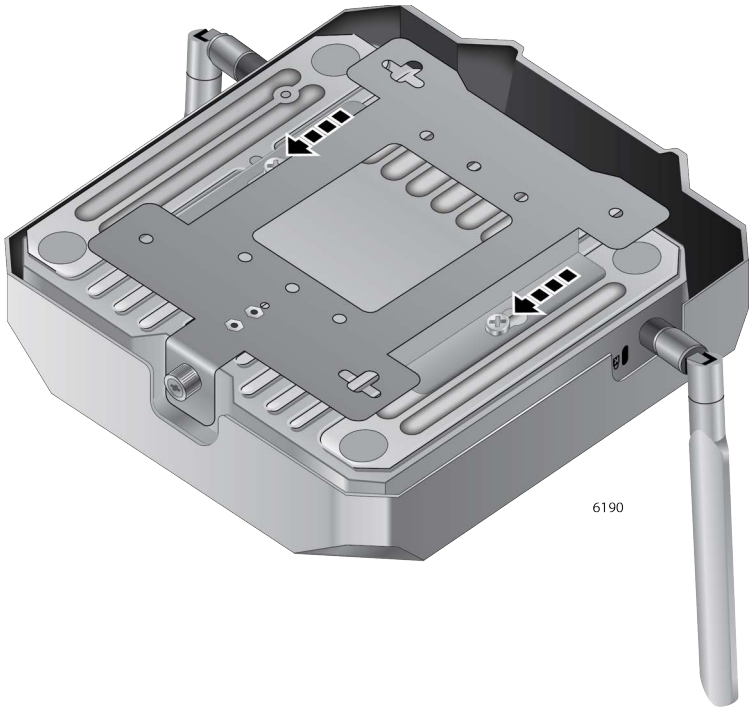

Figure 16. Attaching the Mounting Bracket on the Access Point

5. Slide the mounting bracket forward and remove it from the access point. See Figure 17 on page 39.

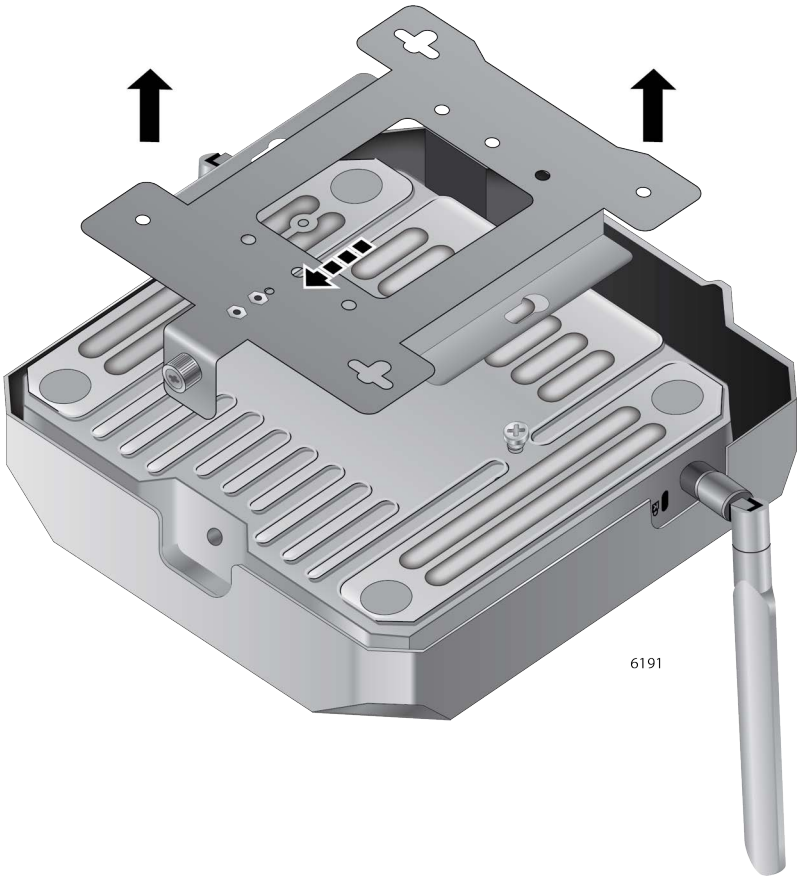

Figure 17. Removing the Mounting Bracket from the Access Point

6. Go to “Installing the Mounting Bracket on a Wall or Ceiling” on page 40.

Installing the Mounting Bracket on a Wall or Ceiling

To install the mounting bracket on a wall of ceiling, perform the following procedure:

1. Choose the location and orientation for the access point on the wall or ceiling. Refer to Figure 10 on page 31.
2. Position the mounting bracket at the selected location and orientation for the access point. Consider the following guidelines.
   - ❒ The thumbscrew on the mounting bracket is where the front panel of the access point will be.
   - ❒ The ports and connectors are on the back panel, away from the thumbscrew.
3. With a pencil, mark the wall or ceiling with the two key-hole slots of the bracket. Refer to Figure 18.

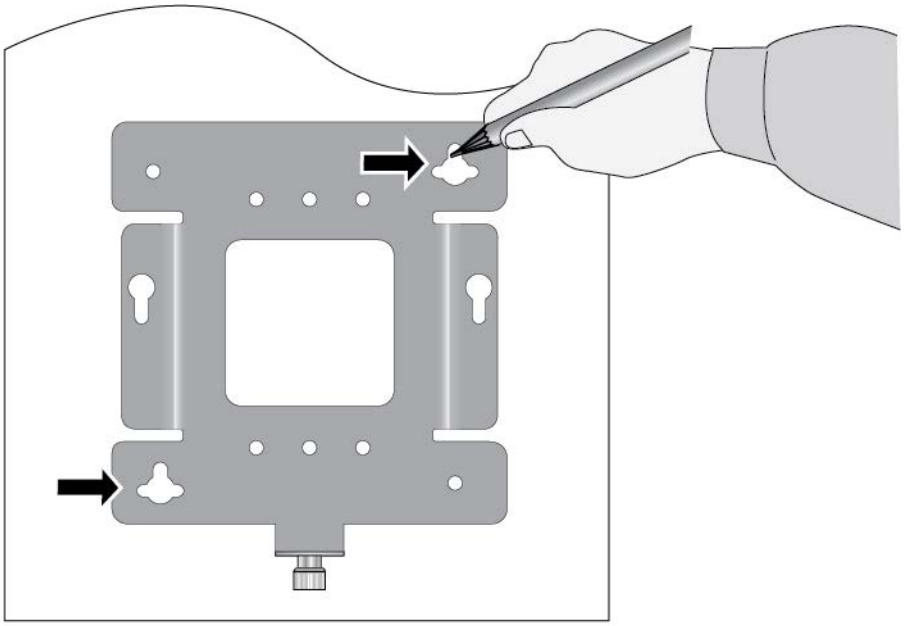

Figure 18. Marking the Holes for the Key-Hole Slots

4. Pre-drill the two marked locations for the keyhole slots on the hard-surface ceiling or wall.

5. Install two M4 screws and anchors (if required). Leave the screws loose enough so that the bracket can slide under the screw heads. Refer to Figure 19.

Note
For a wooden wall or ceiling, use M4 x 25 mm flat-head wood screws and anchors, if required. The screws and anchors are not provided.

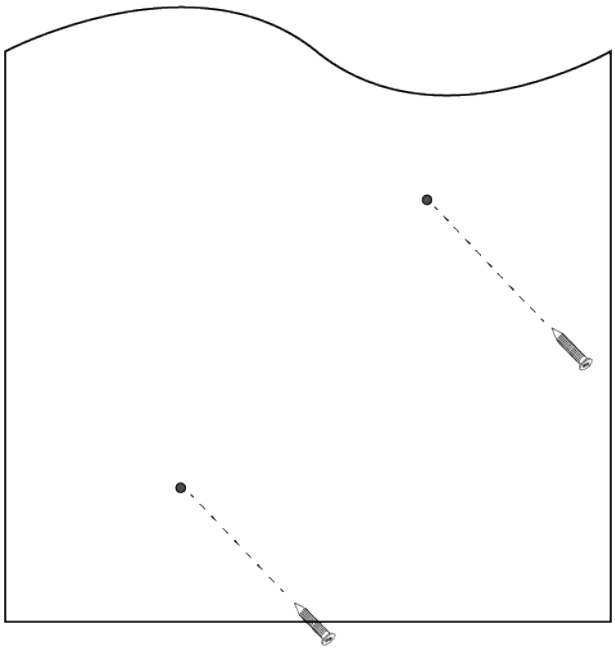

Figure 19. Installing Two Screws

6. Insert the openings of the bracket key-hole slots under the two screw heads and slide the bracket into the narrow end of the key-hole slot openings. See Figure 20.

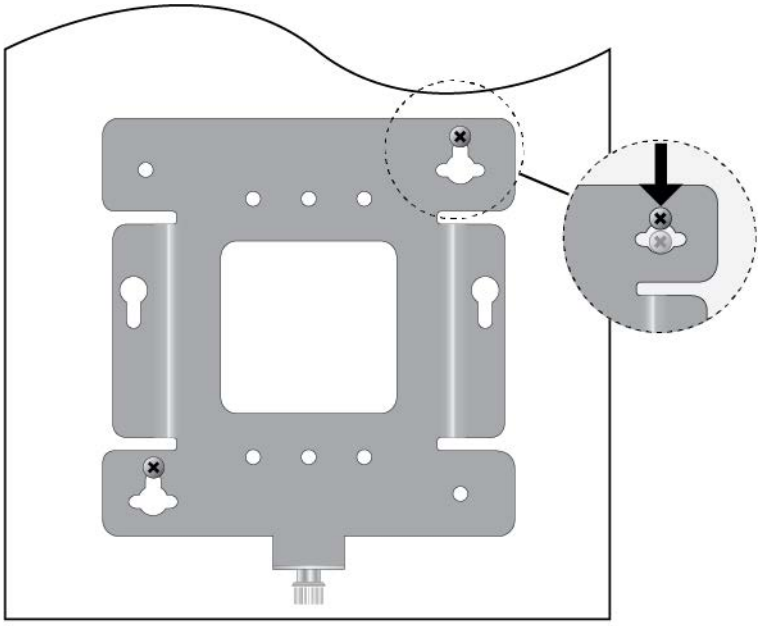

Figure 20. Installing the Mount Bracket On the Screws

7. Tighten the screws snugly onto the bracket.

8. To secure the mounting bracket, pre-drill holes through the two bracket mounting holes opposite the key-hole slots. See Figure 21.

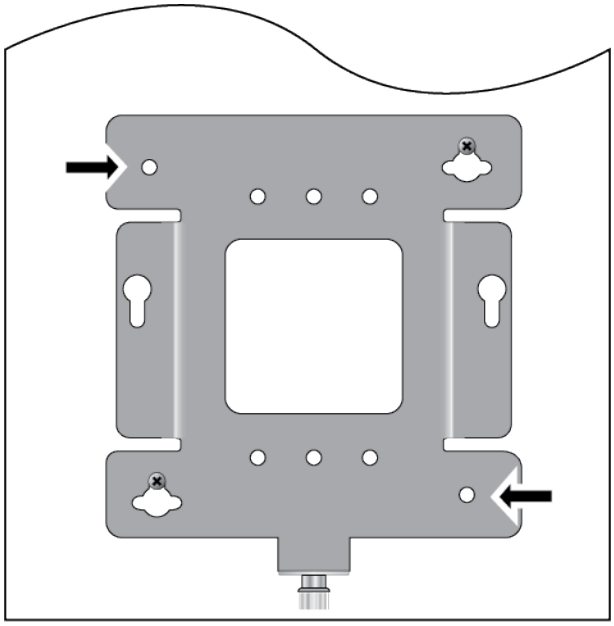

Figure 21. Pre-Drill Holes on Mounting Bracket

9. Install and tighten two M4 screws (not provided) in the holes prepared in Step 8.

   The bracket installation is now complete. See Figure 22.

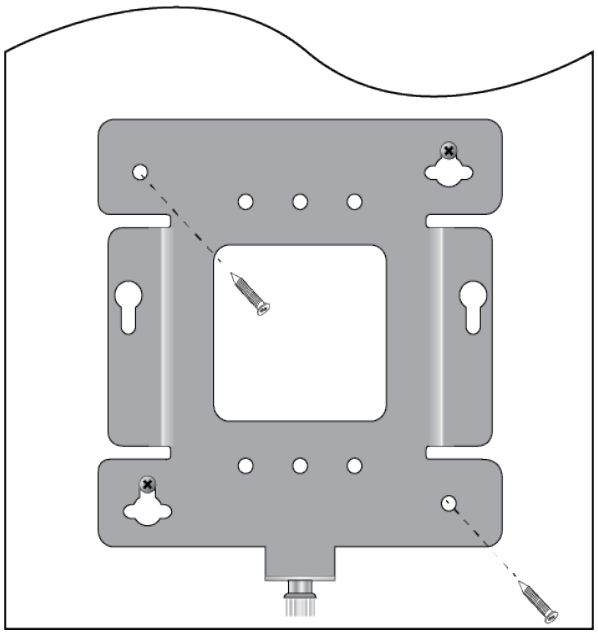

Figure 22. Securing the Mount Bracket

10. Go to “Connecting Ethernet Cables to PORT1 and PORT2” on page 44.

Connecting Ethernet Cables to PORT1 and PORT2

This section describes the instructions for connecting Ethernet cables to PORT1 and PORT2.

Guidelines

Review the following guidelines before connecting cables to PORT1 and PORT2:

- For information on cable specifications, see “Cable Requirements” on page 21.
- If you are installing the access point on a ceiling or wall, you might find it easier to connect the cables before placing the unit on the mounting bracket.
- You must use PORT1 if you are connecting only one LAN port to the network.
- To power the access point through PoE+ LAN port(s), see “PoE+ Power Requirements” on page 65.
- To use both PORT1 and PORT2, you have to connect them to the same network device. The device must support static LAG.
- The default setting for the PORT2 and static LAG on the wireless access point is disabled. You enable them with the on-board web browser management interface. For instructions, see the *TQ7403 Management Software User Guide*.

Note
Do not enable PORT2 until you have configured the other network device for the static LAG.

Connecting the Ethernet Cables to LAN Ports

To connect the network cables, perform the following procedure:

1. To cable PORT1, connect an Ethernet cable into the port. The cable requirements are in “Cable Requirements” on page 21. Refer to Figure 23.

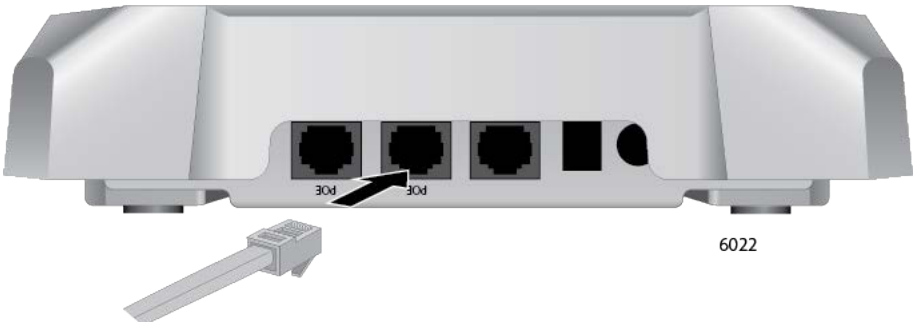

Figure 23. Connecting an Ethernet Cable to PORT1

2. Connect the other end of the Ethernet cable to a network Ethernet device, such as an Ethernet switch or router.

> **Note**
> If the device is PoE+ power sourcing equipment (PSE), the access point begins to power on and initialize its management software.

3. To use PORT2 in the static LAG or Cascade mode, connect a second Ethernet cable to the port. See Figure 24.

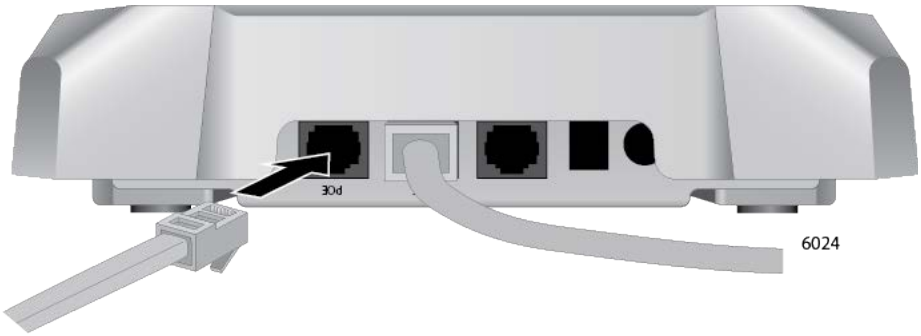

Figure 24. Connecting the Ethernet Cable to PORT2

4. Connect the other end to a network device. To use the port as a static LAG with PORT1, connect it to the same router or switch as PORT1. To use it in the Cascade mode, connect it to a different device. For an overview, refer to “Static Link Aggregation” on page 18 and “Cascade Mode” on page 19.

> **Note**
> The default setting for PORT2 is disabled, To set it to the Static LAG or Cascade mode, use the on-board web browser management interface, explained in the *TQ7403 Management Software User Guide*.

5. Do one of the following:

   a. If the access point is to be powered only by PoE+, without an AC power adapter, go to “Attaching the Access Point to the Mounting Bracket” on page 47.

   b. To connect an external AC power adapter, go to ”Connecting the AC Power Adapter”.

Connecting the AC Power Adapter

The access point can be powered with PoE+ on PORT1 or/and PORT2, an AC power adapter, or both. A wireless access point that is powered by both methods uses the AC adapter as its primary power and PoE as redundant power. For an AC power adapter, Allied Telesis recommends the MWS0091 Power Adapter.

If you purchased a power adapter for the wireless access point, perform the following procedure. Otherwise, go to “Attaching the Access Point to the Mounting Bracket” on page 47.

Perform the following procedure to install an AC power adapter:

1. If the AC power adapter has replaceable AC plugs, verify that the current plug on the adapter is the correct plug for your region. If it is not, install the correct AC plug by following the instructions provided with the adapter.

2. Plug the DC connector of the power adapter into the DC IN jack on the access point. Refer to Figure 25.

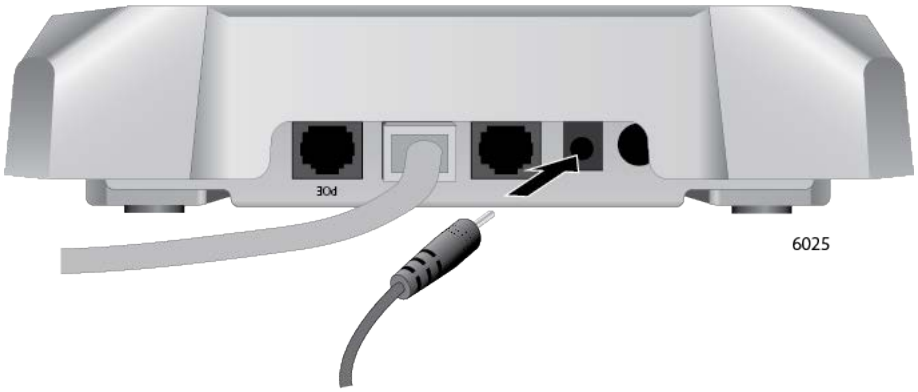

Figure 25. Connecting an AC Power Adapter to the Access Point

3. Connect the power adapter to an appropriate AC power source.

4. Turn on the Power Switch.

> **Note**
> The Power Switch controls power from the AC power supply. It does not control PoE+ on PORT1 and PORT2.

5. Go to “Attaching the Access Point to the Mounting Bracket” on page 47.

Attaching the Access Point to the Mounting Bracket

To attach the wireless access point on the mounting bracket on the wall or ceiling, perform the following procedure:

1. Align the bottom of the access point over the bracket so that the two screws on the bottom of the device fit into the bracket keyholes. Refer to Figure 26. (These are the two access point chassis screws installed in “Pre-fitting the Mounting Bracket on the Access Point” on page 37.)

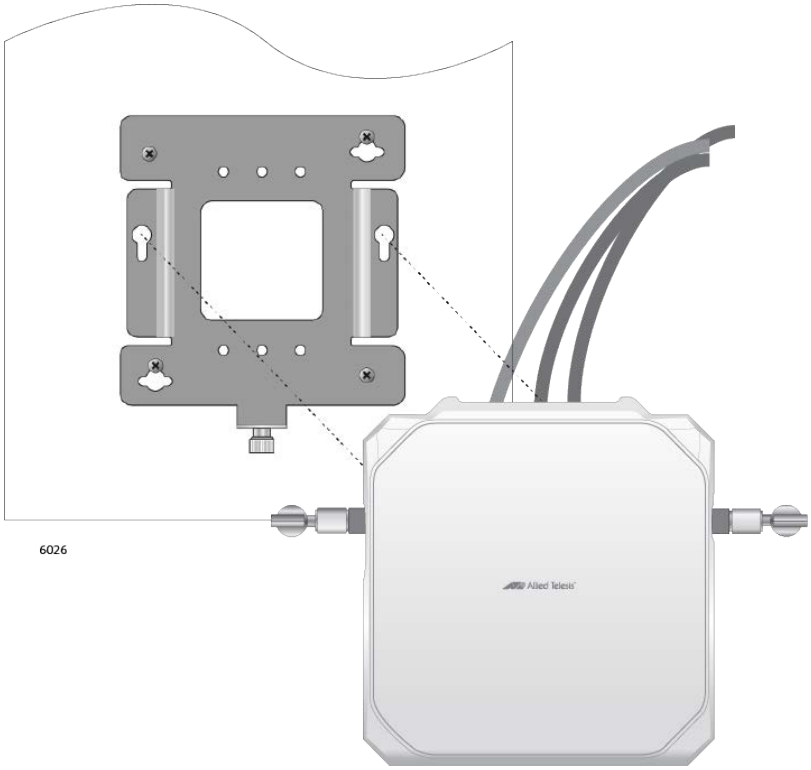

Figure 26. Installing the Access Point on the Mounting Bracket

2. Slide the access point forward until its screws are seated in the bracket keyhole slots and the bracket thumbscrew is aligned with the screw hole on the front panel.

   See Figure 27 on page 48 for the access point and bracket orientations.

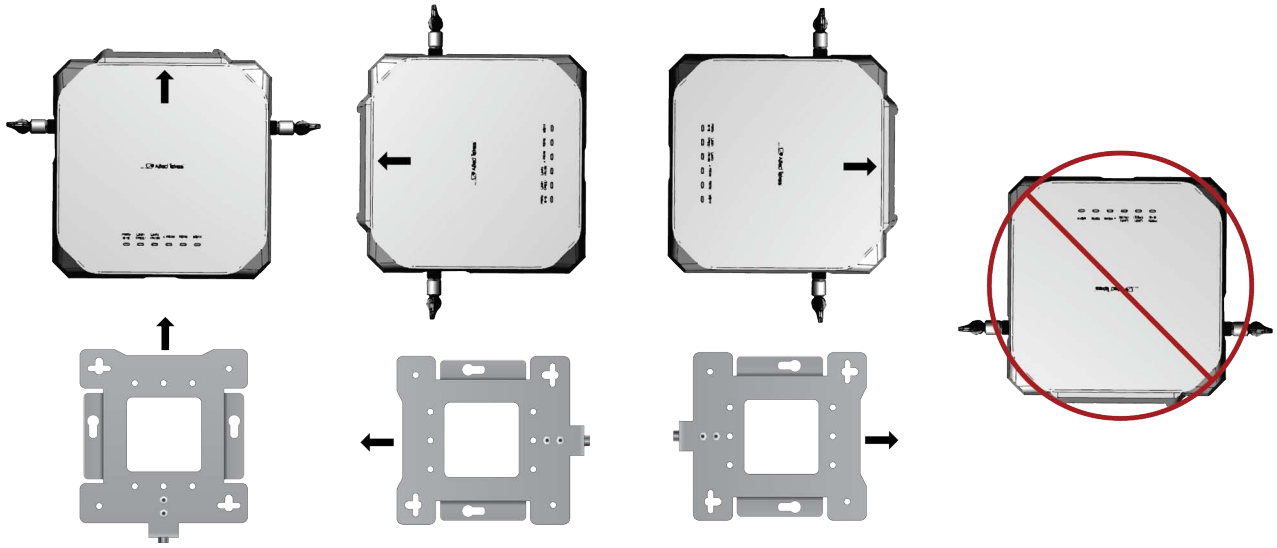

Figure 27. Seating the Access Point on the Mounting Bracket

3. Tighten the thumbscrew to secure the access point to the mounting bracket. Refer to Figure 28.

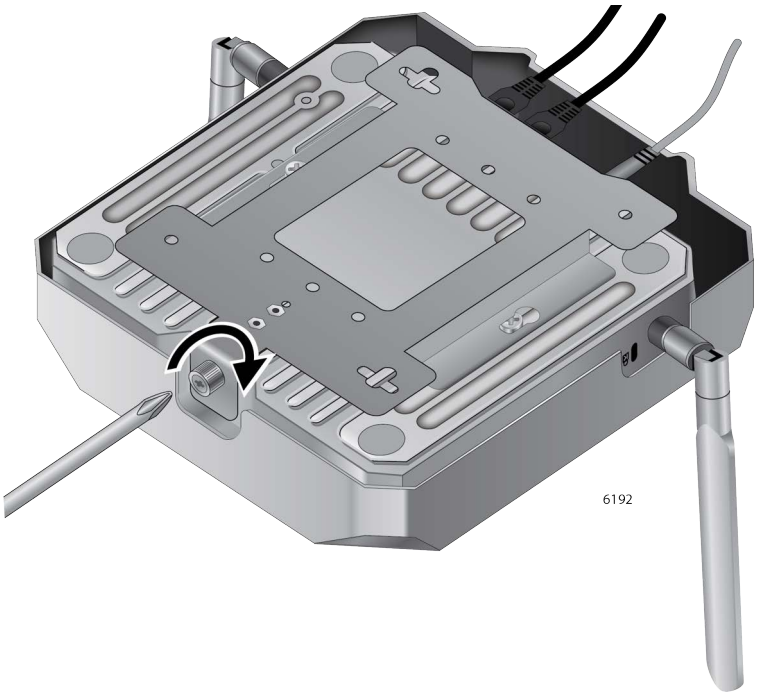

Figure 28. Tightening the Mounting Bracket Thumbscrew

4. Place the Ethernet cable(s) and power cable (if any) along the cable guides inside of the top cover in the cable hide space. See Figure 29.

Figure 29. Fitting the Cables in the Cable Hide

5. If you install an anti-theft device, go to “Installing an Anti-theft Device” on page 50.

6. Go to “Starting the First Management Session” on page 51.

Installing an Anti-theft Device

Installation of an anti-theft cable/lock is optional. The access point has a lock port that is compatible with a Kensington lock. The lock port can be used to physically secure the device to a table, wall, or a ceiling.

Note
Anti-theft devices are not available from Allied Telesis.

1. Follow the instructions provided with the vendor's anti-theft device for the installation. See Figure 30 for the Kensington lock port location.

Figure 30. Kensington Lock Port Location

2. If you are installing the wireless access point on a wall or ceiling and have not installed in on the mounting bracket yet, go to "Attaching the Access Point to the Mounting Bracket" on page 47.

Starting the First Management Session

This section contains an abbreviated version of the procedure to start the first management session. For complete instructions, refer to the TQ7403 *Management Software User Guide or the Getting Started with a Wireless AP Router using the Device GUI*.

The wireless access point firmware includes a DHCP client. The default setting for the client is enabled. When you power on the access point for the first time, it queries the subnet on PORT1 for a DHCP server. If a DHCP server responds to its query, the unit uses the IP address the server assigns to it.

To start the first management session, perform the following procedure:

1. Start the web browser on your management workstation.
2. Enter the IP address of the wireless access point in the URL field of the web browser.

If your network has a DHCP server, enter the IP address the DHCP server assigned to the access point.

If your network does not have a DHCP server, enter the default address:

- ❒ The default address for the TQ7403 is 192.168.1.230
- ❒ The default address for the TQ7403-R 192.168.1.1

The wireless access point displays the login prompt. Refer to Figure 31.

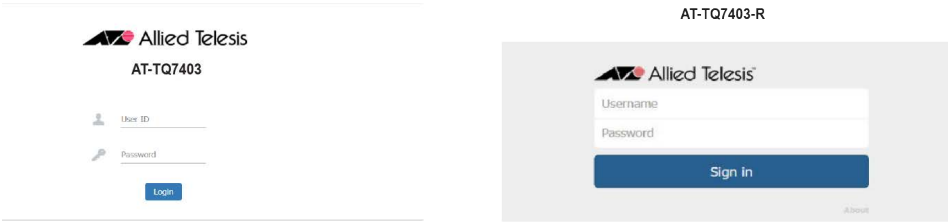

Figure 31. Login Prompt

3. Enter “manager” for the user name and “friend” for the password. The user name and password are case-sensitive.

Starting a Local Management Session

Note
This section is for the TQ7403-R model only.

This procedure explains how to start a local management session on the TQ7403-R device. It assumes that you powered on the device and waited about two minutes for it to initialize its operating software.

Note
A management session of the TQ7403-R device can be either a local session from the Console port, as explained in this section, or a session from the web-based Graphical User Interface. For a session from the Web User Interface, see “Starting the First Management Session” on page 51.

To start a local management session, perform the following procedure:

1. Connect the RJ-45 end of the management cable to the Console port on the TQ7403-R device.
2. Connect the other end of the cable to an RS-232 port on a terminal or personal computer with a terminal emulation program.
3. Configure a terminal or terminal emulation program as follows:
   - Baud rate: 115200 bps
   - Data bits: 8
   - Parity: None
   - Stop bit: 1
   - Flow controller: None
   - Emulation: VT100

   Note
   The port settings are for a DEC VT100 or ANSI terminal, or an equivalent terminal emulator program.

4. Press Enter. You are prompted for a user name and password.
5. Enter the login information:
   - Username: manager
   - Password: friend

Note
User names and passwords are case sensitive.

The local management session starts when the User Exec mode prompt, shown in Figure 32, is displayed.

```
awplus>
```

Figure 32. User Exec Mode Prompt

Note
The prompt shows the AlliedWare™ Plus operating system is installed on the TQ7403-R device.

Chapter 3

Installing the TQ0301 Patch Antenna and TQ0064 Extension Cable

The procedures in this chapter explain how to install and attach the TQ0301 dual-band patch antenna and TQ0064 extension cable to the TQ7403 Series access point:

- ❒ “Unpacking the TQ0301 Dual-band Patch Antenna” on page 56
- ❒ “Unpacking the TQ0064 Extension Cable” on page 58
- ❒ “Installing the TQ0301 Patch Antenna on a Pole” on page 59
- ❒ “Attaching the Cables to the TQ0301 Patch Antenna” on page 61

Unpacking the TQ0301 Dual-band Patch Antenna

To unpack the TQ0301 patch antenna, perform the following procedure:

1. Remove all components from the shipping boxes.

> **Note**
> Store the packaging material in a safe location. You must use the original shipping material if you need to return the unit to Allied Telesis.

2. Verify that all components listed in Table 3 are included in your shipping boxes.

Table 3. Components in the TQ0301 Patch Antenna Shipping Boxes

Name	Component
Dual-band Patch Antenna (Bracket Assembly attached)	
Four Cables (2-meter)	

Table 3. Components in the TQ0301 Patch Antenna Shipping Boxes

Name	Component
Four SMA to N-Jack Conversion Adapters	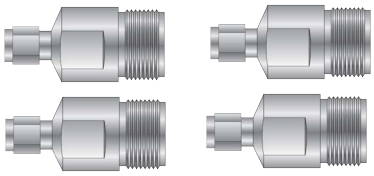
Two Metal Protective Caps	

3. If any item is missing or damaged, contact your Allied Telesis sales representative for assistance.

Unpacking the TQ0064 Extension Cable

To unpack the TQ0064 extension cable, perform the following procedure:

1. Remove all components from the shipping boxes.

   Note
   Store the packaging material in a safe location. You must use the original shipping material if you need to return the unit to Allied Telesis.

2. Verify that the component listed in Table 4 is included in your shipping box.

Table 4. Component in the TQ0064 Extension Cable Shipping Box

Name	Component
10-meter Cable	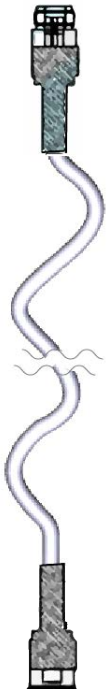

3. If any item is missing or damaged, contact your Allied Telesis sales representative for assistance.

Installing the TQ0301 Patch Antenna on a Pole

The TQ0301 patch antenna is designed to be mounted on a pole with the attached pole-mount brackets. See Figure 33.

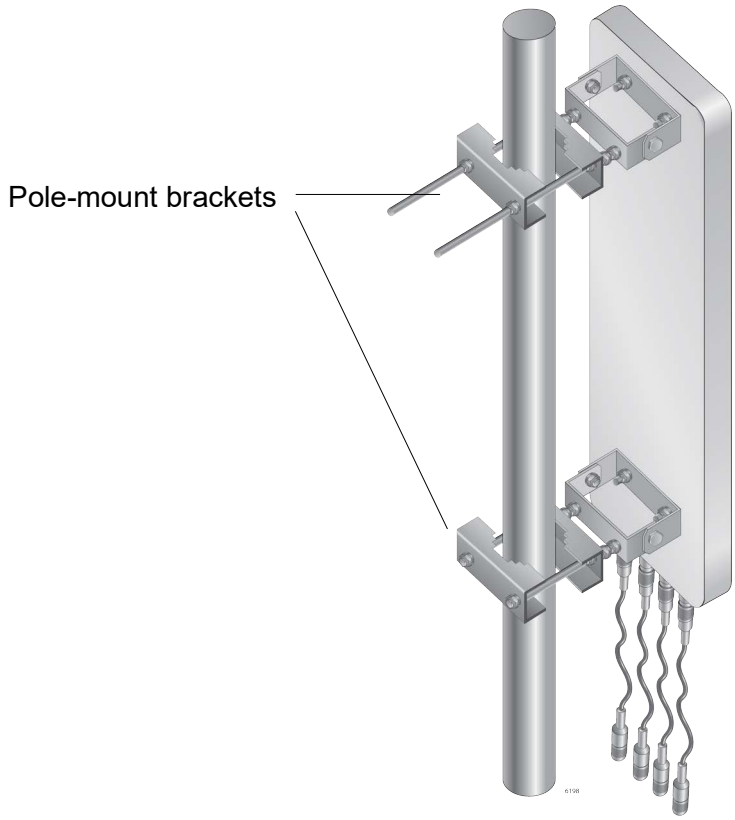

Figure 33. TQ0301 Patch Antenna on a Pole

Guidelines for Pole Installation

Review the following guidelines before installing the access point on a pole:

- ❒ The TQ0301 patch antenna must be installed with the cable connectors facing down.
- ❒ The access point can be connected to the TQ0301 antenna with the 2-meter cables or TQTQ0064 10-meter cable.
- ❒ Attach the metal protective cap on the unused antenna connector.
- ❒ The TQ7403 Series access point can be installed in the configurations shown in Figure 34 on page 60.

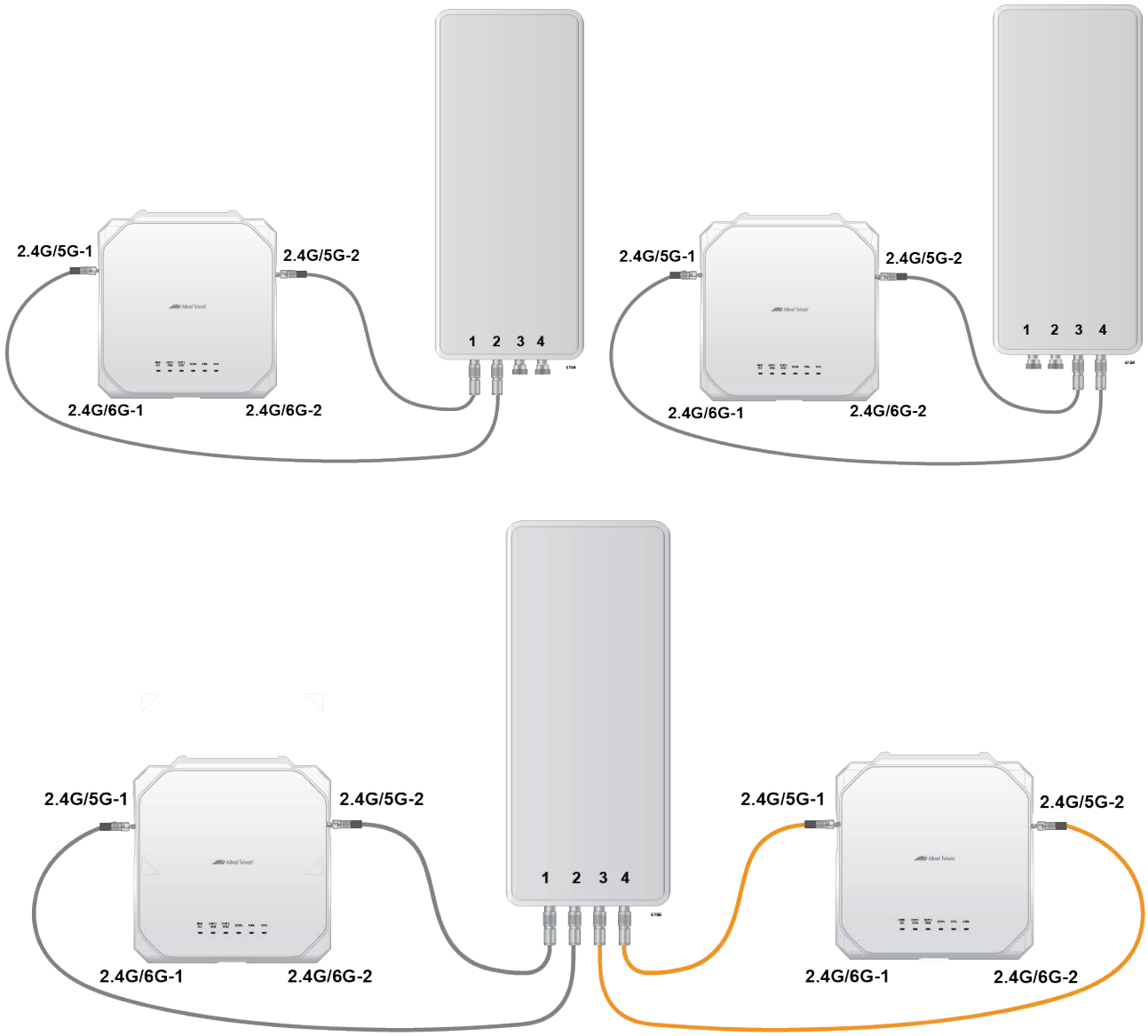

Figure 34. TQ7403 Series Access Point and TQ0301 Patch Antenna Configurations

Attaching the Cables to the TQ0301 Patch Antenna

Allied Telesis offers two types of cables for the TQ0301 patch antenna. To connect the TQ7403 Series access point and TQ0301 patch antenna, use one of the following types of cables:

- ❒ 2-meter cables (come with the TQ0301 patch antenna)
- ❒ Optional TQ0064 10-meter cables

To connect the TQ7403 Series access point and TQ0301 patch antenna,

Attaching the Cables to the TQ0301 Antenna

To attach cables to the TQ0301 patch antenna, perform the following procedure:

1. Remove the connector blind caps covering the antenna connectors.
2. Attach the N-Jack adapters to the 2-meter cables.
3. Determine which antenna connectors to use by referring to Figure 34 on page 60.
4. Screw the cables to the antenna connectors. See Figure 35 as an example.

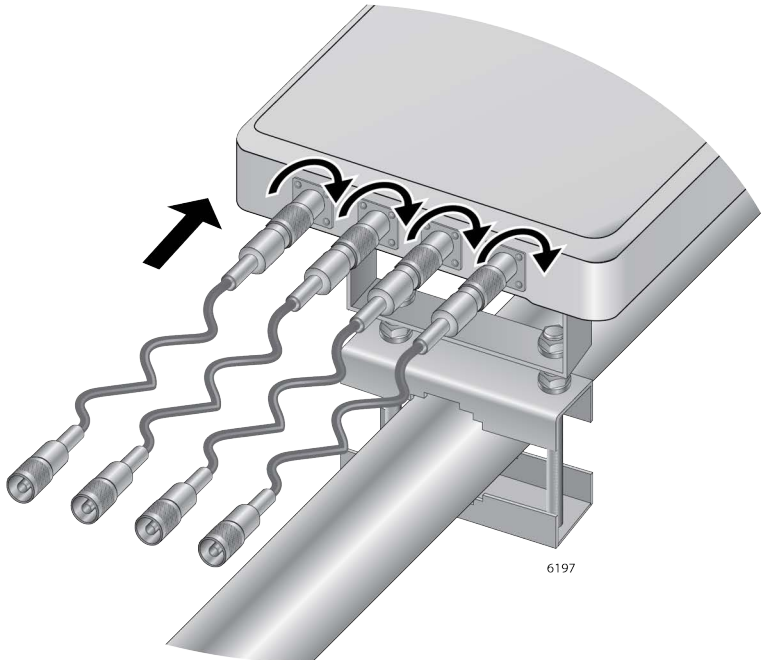

Figure 35. Attaching the Cables to the Antenna Connectors

5. Attach the metal protective cap on unused antenna connector.

Attaching the Cables to the TQ7403 Series Access Point

To attach the cables to the TQ7403 Series access point, perform the following procedure:

1. Attach the N-Jack conversion adapter to the antenna connector.
2. Screw the cable connector onto the N-Jack conversion adapter. See Figure 36.

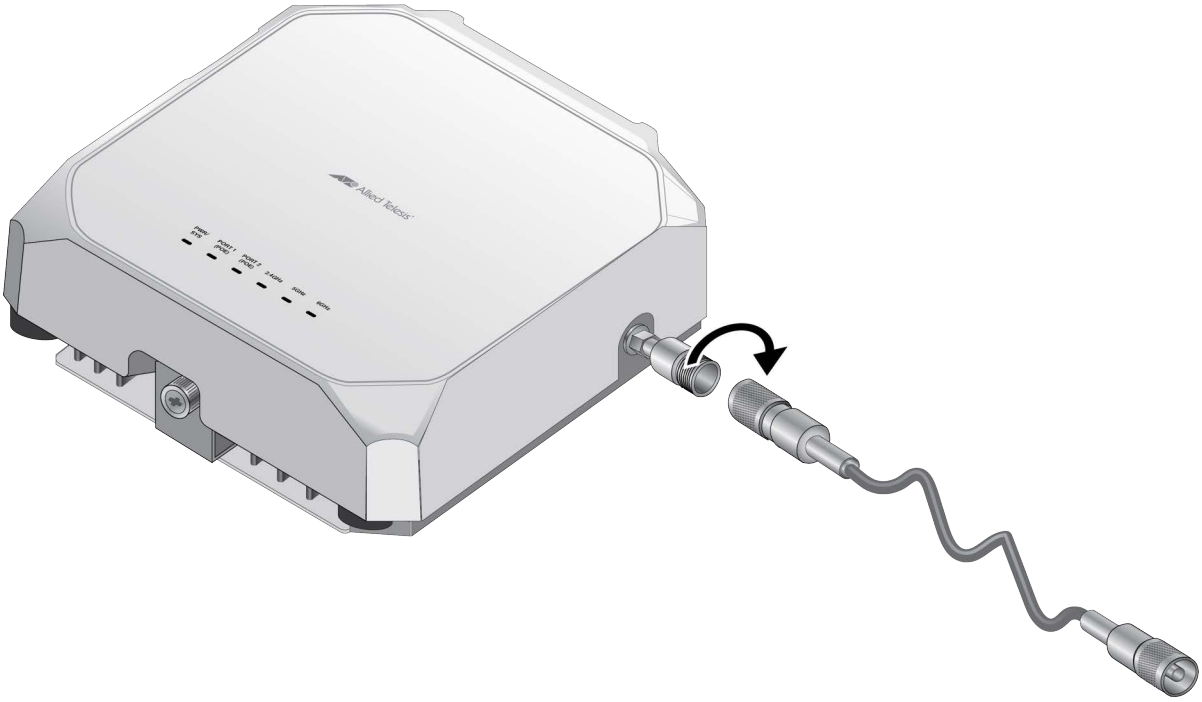

Figure 36. Attaching the cable to an Antenna Connector

3. Repeat Step 1 and Step 2 to connect another cable to the other side of antenna connector on the access point.

Appendix A

Technical Specifications

This appendix contains the specifications for the TQ7403 Series access point in the following sections:

- “Physical Specifications”
- “Environmental Specifications”
- “Power Specifications” on page 64
- “Cable Specifications” on page 65
- “LAN Ports Specifications and Pinouts” on page 66

Physical Specifications

Table 5. Physical Specifications

Parameter	Specification
Dimensions (W x D x H) without external antennas	200 mm X 210 mm X 45 mm (7.9 in. x 8.3 in. x 1.8 in.)
Dimensions (W x D x H) with external antennas	270 mm X 210 mm X 160mm (11 in. x 8.3 in. x 6.3 in.)
Weight with external antennas	1.2 Kg (2.6 lbs)

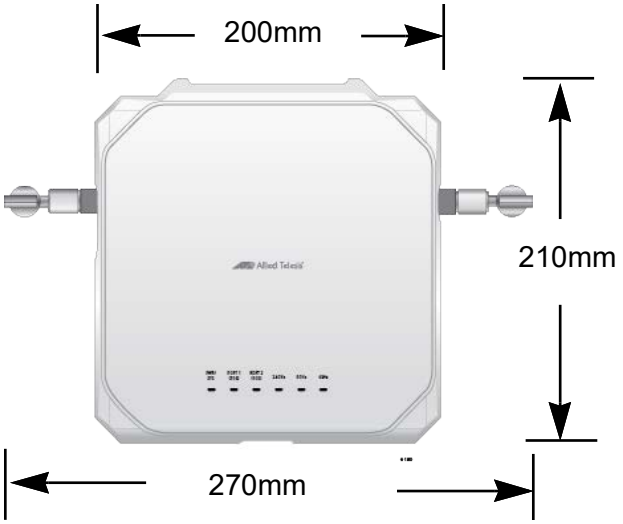

Figure 37. Dimensions

Environmental Specifications

Table 6. Environmental Specifications

Parameter	Specification
Operating Temperature	0° C to 50° C (32° F to 122° F)
Storage Temperature	- 25° C to 70° C (- 13° F to 158° F)
Operating Humidity	5% to 90% non-condensing
Storage Humidity	0% to 95% non-condensing
Maximum Operating Altitude	3000 m (9843 ft)

Power Specifications

External AC Adapter Specifications

Table 7. External AC/DC Adapter Specifications

Parameter	Specification
Input Voltage Range	100 - 240 VAC
Input Frequency	50 - 60 Hz
Rated Output Voltage	+12 VDC
Rated Output Current	4 A
Temperature Range	0° C to 50° C (32° F to 122° F)
Maximum Operating Altitude	3000 m (9843 ft)

Note
If you decide to use an AC adapter with the access point, Allied Telesis recommends the PWRADP-01 (DA-48Z12) adapter. The adapter is a UL Listed power supply and is compatible with the above specifications while meeting the standards of a separated extra-low voltage (SELV) product.

Note
The PWRADP-01 (DA-48Z12) adapter is sold separately.

PoE+ Power Requirements

Table 8. PoE+ Power Specifications on LAN Ports

Maximum Power Consumption	24.1 watts
Rated Voltage	DC 48V
Rated Current	0.67A

Note
Allied Telesis recommends using UL-certified PoE injectors.

Cable Specifications

The minimum cable requirements for PORT1 and PORT2 are listed here.

- 100Mbps ports: Standard TIA/EIA 568-B-compliant Category 3 shielded or unshielded cabling.
- 1G/2.5G ports: Standard TIA/EIA 568-A-compliant Category 5 or TIA/EIA 568-B-compliant Enhanced Category 5 (Cat 5e) unshielded cabling.

Note
The maximum operating distance of the cables is 100 meters (328 feet).

LAN Ports Specifications and Pinouts

Port Specifications

The access point port specifications are shown in Table 9.

Table 9. LAN Port Specifications

Connector	Specification
PoE standard - PORT1 and PORT2	IEEE 802.3at (class 4)

Port Pinouts

The pin signal definitions for PORT1 and PORT2 are given here. Figure 38 illustrates the pin layout of the ports.

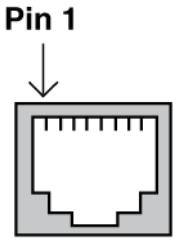

Figure 38. Pin Layout for RJ45 Connector on LAN Port

Table 10 lists the pin signals.

Table 10. Pin Signals for 100M/1G/2.5G Base-T Connectors

Pin	100 Mbps MDI Signal	100 Mbps MDI-X Signal	1G/2.5G Signal
1	TX+	RX+	Bi-directional pair A+
2	TX-	RX-	Bi-directional pair A-
3	RX+	TX+	Bi-directional pair B+
4	Not used	Not used	Bi-directional pair C+
5	Not used	Not used	Bi-directional pair C-
6	RX-	TX-	Bi-directional pair B-
7	Not used	Not used	Bi-directional pair D+
8	Not used	Not used	Bi-directional pair D-

Appendix B

Regulatory Statements

This appendix contains the following regulatory statements:

- ❒ “Federal Communication Commission Interference Statement” on page 68
- ❒ “European Union Restriction of the Use of Certain Hazardous Substances (RoHS) in Electrical and Electronic Equipment” on page 70
- ❒ “Industry Canada Statement” on page 71
- ❒ “Europe - EU Declaration of Conformity” on page 73
- ❒ “UK - UKCA Declaration of Conformity” on page 74

Federal Communication Commission Interference Statement

This device complies with Part 15 of the FCC Rules. Operation is subject to the following two conditions: (1) This device may not cause harmful interference, and (2) this device must accept any interference received, including interference that may cause undesired operation.

This equipment has been tested and found to comply with the limits for a Class B digital device, pursuant to Part 15 of the FCC Rules. These limits are designed to provide reasonable protection against harmful interference in a residential installation. This equipment generates, uses and can radiate radio frequency energy and, if not installed and used in accordance with the instructions, may cause harmful interference to radio communications. However, there is no guarantee that interference will not occur in a particular installation. If this equipment does cause harmful interference to radio or television reception, which can be determined by turning the equipment off and on, the user is encouraged to try to correct the interference by one of the following measures:

- ❒ Reorient or relocate the receiving antenna.
- ❒ Increase the separation between the equipment and receiver.
- ❒ Connect the equipment into an outlet on a circuit different from that to which the receiver is connected.
- ❒ Consult the dealer or an experienced radio/TV technician for help.

Caution
FCC Caution: Any changes or modifications not expressly approved by the party responsible for compliance could void the user's authority to operate this equipment. E80

Advertissement
Avertissement de la FCC: Tout changement ou modification non expressément approuvé par la partie responsable de la conformité pourrait annuler l'utilisateur de autorisation d'exploiter cet équipement. E80

Warning
Only trained and qualified personnel are allowed to install or to replace this equipment. E14

Attention
Seul le personnel qualifié et compétent est autorisé à installer ou à remplacer cet équipement. E14

This transmitter must not be co-located or operating in conjunction with any other antenna or transmitter.

The device is restricted to indoor use only. Selection of other channels is disabled. The device meets all the other requirements specified in Part E, Section 15.407 of the FCC Rules.

The operation of this device is prohibited on oil platforms, cars, trains, boats, and aircraft, except that operation of this device is permitted in large aircraft while flying above 10,000 feet.

Operation of transmitters in the 5.925-7.125 GHz band is prohibited for control of or Communications.

Radiation Exposure Statement

This equipment complies with FCC radiation exposure limits set forth for an uncontrolled environment. The AT-TQ7403 and AT-TQ7403-R access points should be installed and operated with minimum distance 53 cm between the radiator and your body.

European Union Restriction of the Use of Certain Hazardous Substances (RoHS) in Electrical and Electronic Equipment

This Allied Telesis RoHS-compliant product conforms to the European Union Restriction of the Use of Certain Hazardous Substances (RoHS) in Electrical and Electronic Equipment. Allied Telesis ensures RoHS conformance by requiring supplier Declarations of Conformity, monitoring incoming materials, and maintaining manufacturing process controls.

Note
For additional regulatory statements, refer to Appendix B, ”Regulatory Statements” on page 67.

Industry Canada Statement

This device contains licence-exempt transmitter(s)/receiver(s) that comply with Innovation, Science and Economic Development Canada's licence-exempt RSS(s). Operation is subject to the following two conditions:
(1) This device may not cause interference.
(2) This device must accept any interference, including interference that may cause undesired operation of the device.

L'emetteur/récepteur exempt de licence contenu dans le présent appareil est conforme aux CNR d'Innovation, Sciences et Développement économique Canada applicables aux appareils radio exempts de licence. L'exploitation est autorisée aux deux conditions suivantes:
(1) L'appareil ne doit pas produire de brouillage.
(2) L'appareil doit accepter tout brouillage radioélectrique subi, même si le brouillage est susceptible d'en compromettre le fonctionnement.

This Class B digital apparatus complies with Canadian ICES-003.

Cet appareil numérique de la Class B est conforme à la norme NMB-003 du Canada.

The maximum antenna gain permitted for devices in the bands 5250-5350 MHz and 5470-5725 MHz shall be such that the equipment still complies with the e.i.r.p. limit.

le gain maximal d'antenne permis pour les dispositifs utilisant les bandes 5250-5350 MHz et 5470-5725 MHz doit se conformer à la limite de p.i.r.e.

The maximum antenna gain permitted for devices in the band 5725-5850 MHz shall be such that the equipment still complies with the e.i.r.p. limits specified for point-to-point and non-point-to-point operation as appropriate.

le gain maximal d'antenne permis (pour les dispositifs utilisant la bande 5725-5850 MHz) doit se conformer à la limite de p.i.r.e. spécifiée pour l'exploitation point à point et non point à point, selon le cas.

Operation shall be limited to indoor use only.

Utilisation limitée à l'intérieur seulement.

Operation on oil platforms, cars, trains, boats and aircraft shall be prohibited except for on large aircraft flying above 10,000 ft.

Utilisation interdite à bord de plateformes de forage pétrolier, de voitures, de trains, de bateaux et d'aéronefs, sauf à bord d'un gros aéronef volant à plus de 10 000 pieds d'altitude.

Caution:

(i) the device for operation in the band 5150-5250 MHz is only for indoor use to reduce the potential for harmful interference to co-channel mobile satellite systems.

Avertissement:

Le guide d'utilisation des dispositifs pour réseaux locaux doit inclure des instructions précises sur les restrictions susmentionnées, notamment:

(i) les dispositifs fonctionnant dans la bande 5150-5250 MHz sont réservés uniquement pour une utilisation à l'intérieur afin de réduire les risques de brouillage préjudiciable aux systèmes de satellites mobiles utilisant les mêmes canaux.

Radiation Exposure Statement:

This equipment complies with ISED radiation exposure limits set forth for an uncontrolled environment. The AT-TQ7403 and AT-TQ7403-R access points should be installed and operated with minimum distance 31 cm between the radiator and your body.

Déclaration d'exposition aux radiations:

Cet équipement est conforme aux limites d'exposition aux rayonnements ISED établies pour un environnement non contrôlé. Les points d'accès AT-TQ7403 et AT-TQ7403-R doivent être installés et utilisés avec une distance minimale de 31 cm entre le radiateur et votre corps.

Antenna Information:

Set			Antenna Gain (dBi)									
No.	Item	Type	2.4GHz (Radio1)	5GHz (Radio2)				6GHz (Radio3)				Bluetooth/ Zigbee (Radio4)
				UNII 1	UNII 2A	UNII 2C	UNII 3	UNII 5	UNII 6	UNII 7	UNII 8	
1	External Antenna (default)	Detachable/ Dipole	28.3	2.88	3.85	3.56	3.85	-	-	-	-	-
2	External Antenna with 2M cable (optional / TQ0301)	Detachable/ Patch	11.5	13.55	13.48	13.31	13.42	-	-	-	-	-
3	External Antenna with 2M & 10M cables (optional / TQ0301 & TQ0064)	Detachable/ Patch	7.73	7.39	7.32	7.15	7.26	-	-	-	-	-
4	Internal Antenna (default)	Fixed/ PIFA	-	-	-	-	-	5.93	5.99	5.99	5.98	2.62

Europe - EU Declaration of Conformity

Hereby, Allied Telesis declares that the radio equipment type [AT-TQ7403-R] is in compliance with Directive 2014/53/EU.

Operating Frequencies and Maximum Transmission Power Levels

The operating frequencies and maximum transmission power levels for wireless devices operated in the EU are listed below:

AT-TQ7403-R

	Beamforming	Non-Beamforming
2412-2472MHz	19.99 dBm	19.99 dBm
2412-2472MHz (BLE)		12.00 dBm
2412-2472MHz (Zigbee)		13.19 dBm
5150-5250 MHz	22.88 dBm	22.98 dBm
5250-5350 MHz	22.98 dBm	22.98 dBm
5470-5725 MHz	29.95 dBm	29.95 dBm
5925-6425 MHz	22.89 dBm	22.98 dBm

Note
Operations in the 5.15 - 5.35 GHz band are restricted to indoor usage only.

Radiation Exposure Statement

This equipment complies with CE radiation exposure limits set forth for an uncontrolled environment. This equipment should be installed and operated with a minimum distance of 20 cm between the radiator and your body.

AT	BE	BG	CH	CY	CZ	DE	DK	EE
EL	ES	FI	FR	HR	HU	IE	IS	IT
LI	LT	LU	LV	MT	NL	NO	PL	PT
RO	SE	SI	SK	TR	UK (NI)			

Importer

Allied Telesis International BV
Incheonweg 7, 1437 EK Rozenburg

Note
Contact Allied Telesis for the EU conformity statement. To contact Allied Telesis, visit our web site at **www.alliedtelesis.com/contact**.

UK - UKCA Declaration of Conformity

Hereby, Allied Telesis declares that the radio equipment type [AT-TQ7403, AT-TQ7403-R] is in compliance with the Radio Equipment Regulations 2017

Operating Frequencies and Maximum Transmission Power Levels

The operating frequencies and maximum transmission power levels for wireless devices operated in the UK are listed below:

AT-TQ7403, AT-TQ7403-R

	Beamforming	Non-Beamforming
2412-2472MHz	19.99 dBm	19.99 dBm
2412-2472MHz (BLE)		12.00 dBm
2412-2472MHz (Zigbee)		13.19 dBm
5150-5250 MHz	22.88 dBm	22.98 dBm
5250-5350 MHz	22.98 dBm	22.98 dBm
5470-5725 MHz	29.95 dBm	29.95 dBm
5925-6425 MHz	22.89 dBm	22.98 dBm

Note
Operations in the 5.15 - 5.35 GHz band are restricted to indoor usage only.

Radiation Exposure Statement

This equipment complies with UK radiation exposure limits set forth for an uncontrolled environment. This equipment should be installed and operated with a minimum distance of 20 cm between the radiator and your body.

Importer

Allied Telesis International BV
11 Pine Court, Kembrey Park Swindon Wiltshire SN2 8AD, United Kingdom

Note
Contact Allied Telesis for the UK conformity statement. To contact Allied Telesis, visit our web site at **www.alliedtelesis.com/contact**.

Appendix C

Radiation Patterns

This appendix contains the following sections:

- ❒ “Antenna Locations and Axes” on page 78
- ❒ “Radiation Patterns for BLE” on page 78
- ❒ “Radiation Patterns for Wi-Fi 2.4GHz” on page 79
- ❒ “Radiation Patterns for Wi-Fi 5GHz” on page 79
- ❒ “Radiation Patterns for Wi-Fi 6GHz” on page 80

Antenna Locations and Axes

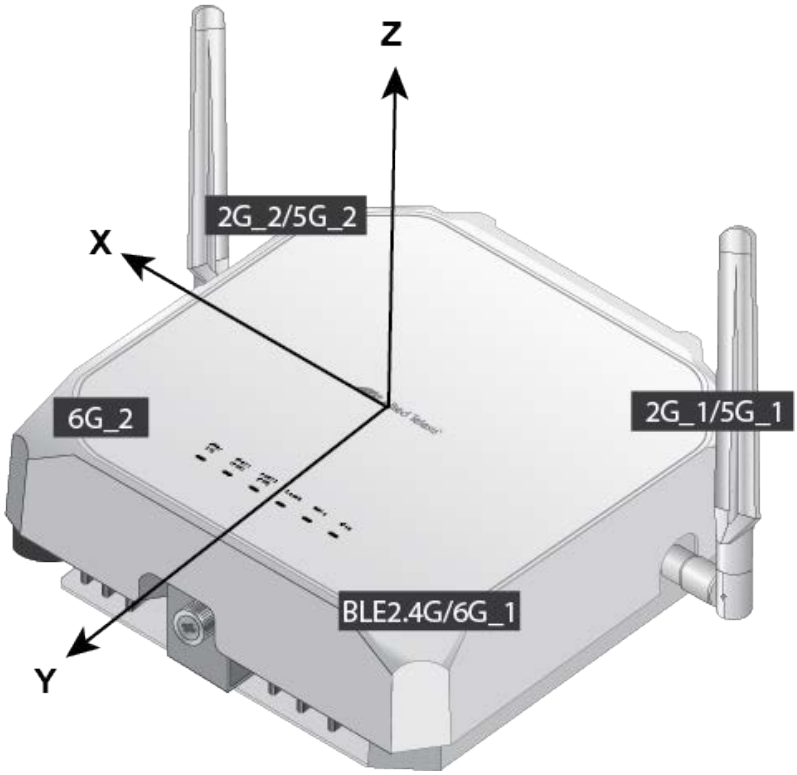

Figure 39. Antenna Locations and Axes

Radiation Patterns for BLE

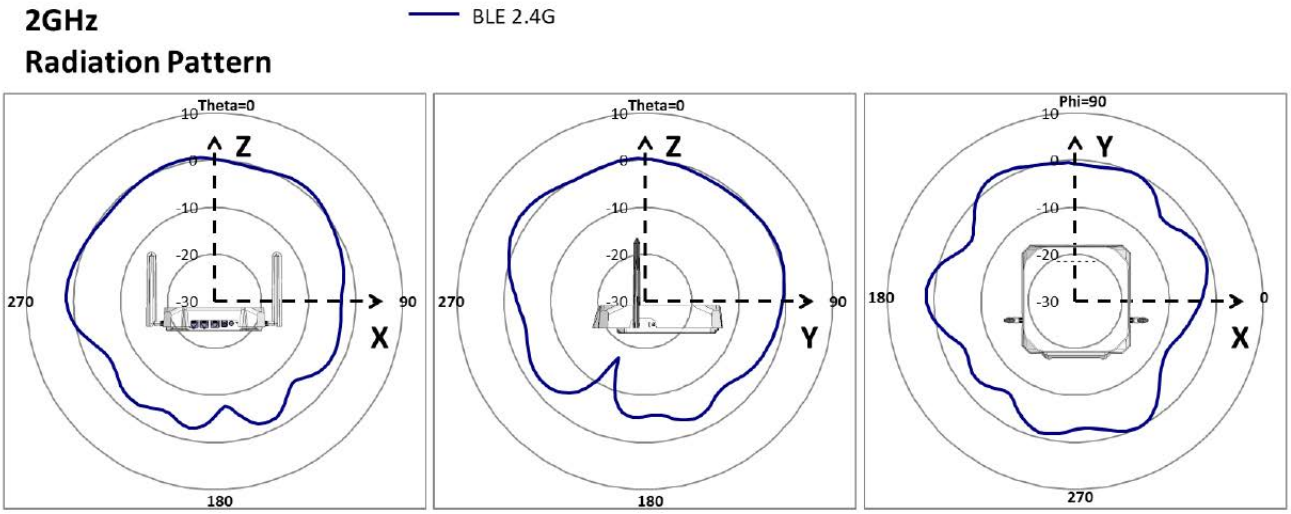

Radiation Patterns for Wi-Fi 2.4GHz

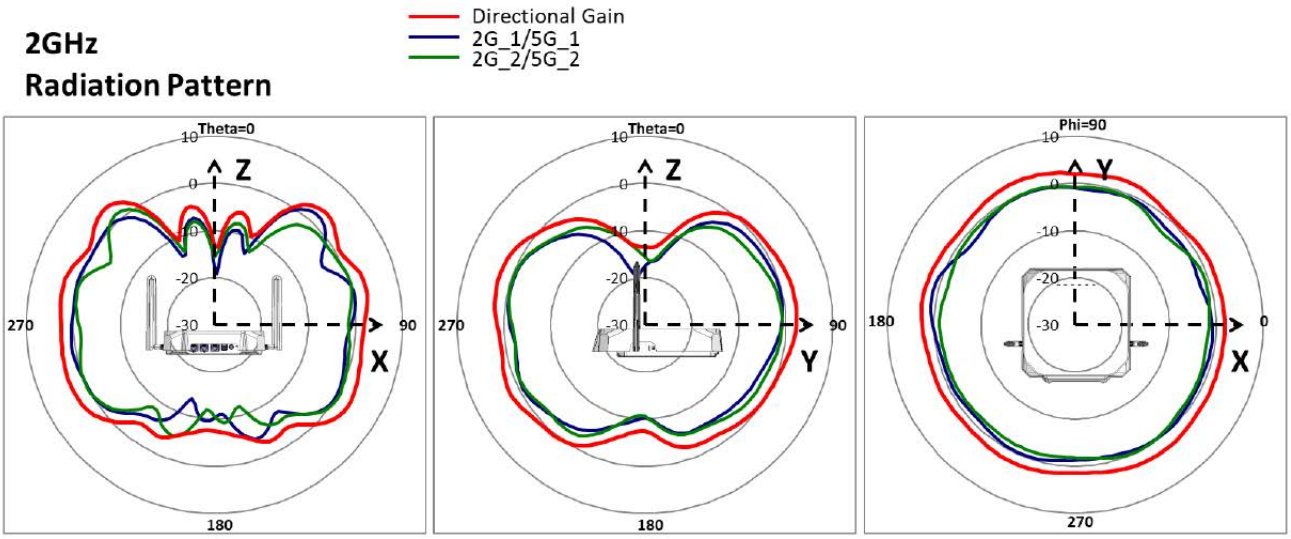

Radiation Patterns for Wi-Fi 5GHz

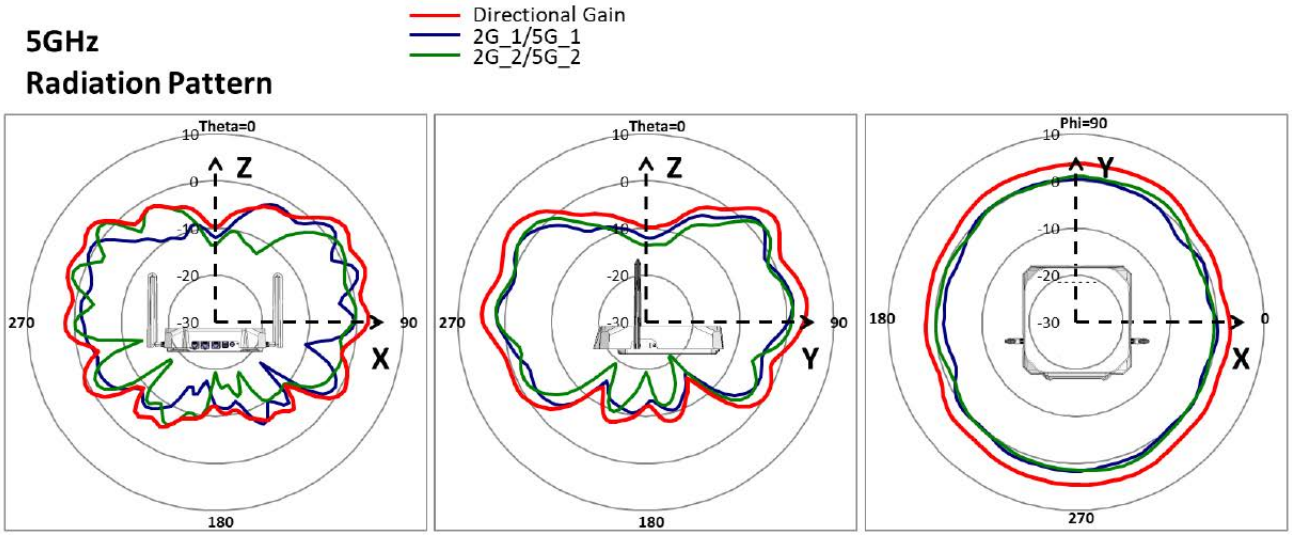
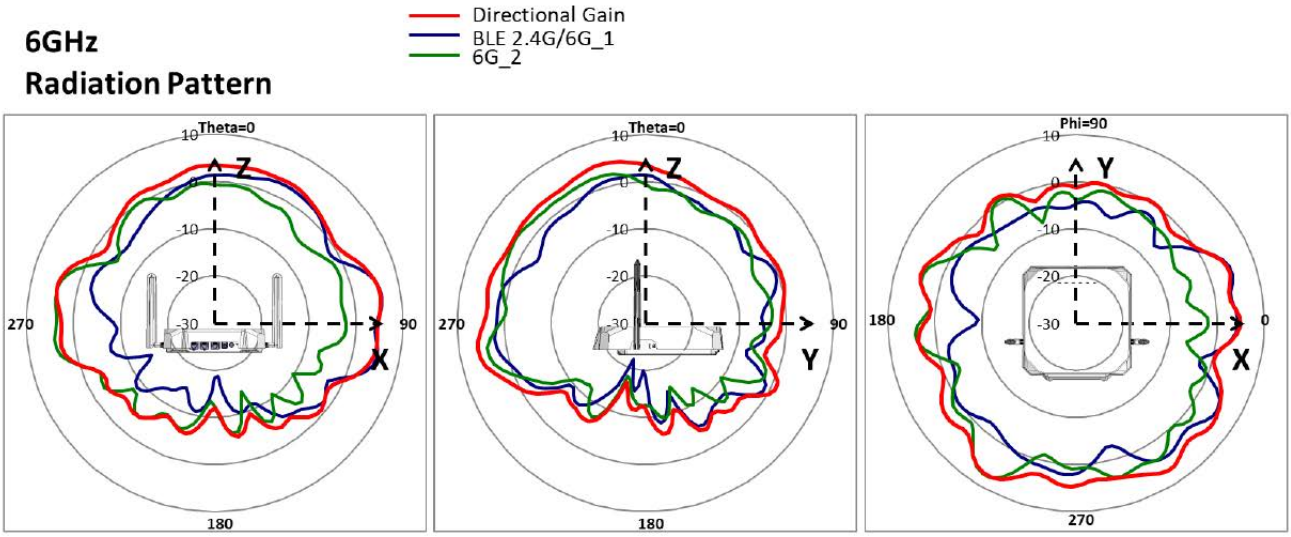
Radiation Patterns for Wi-Fi 6GHz