Quick Installation Guide

TQ7403 Wireless Access Point

The access point models included in this Quick Installation guide are:

- ❒ AT-TQ7403
- ❒ AT-TQ7403-R

Note

The TQ7403-R wireless router shares the same chassis design with the TQ7403 access points so that they look the same. To distinguish one model from another, place a sticker with a model name on the plastic of the device as necessary.

Note

The TQ7403-R is part of the TQR Series.

Installation and User Guides

This document contains an abbreviated version of the installation instructions for the TQ7403 and TQ7403-R Wireless Access Points. For complete installation and management instructions, see the following documents:

- ❒ *Installation Guide: TQ7403 Wireless Access Point*

For documentation about the TQ7403, see:

- ❒ *User Guide: Management Software for TQ7403 Wireless Access Point*

For documentation about the TQ7403-R, see:

- ❒ *Getting Started with TQ-R Series Wireless AP Routers*

Find more documentation on the Allied Telesis website at **www.alliedtelesis.com/library**.

Allied OneConnect Onboarding Service

The TQR Series features the OneConnect Onboarding service from Allied Telesis. The service automatically configures managed Allied Telesis products by downloading customized configuration packages from a regional cloud-based OneConnect Onboarding server.

Please read the following before powering on the access point:

- ❒ TQR Series devices automatically start the OneConnect Onboarding service when it receives an IPv4 address from a DHCP server. The port and system LEDs will begin flashing after connecting with the cloud-based service and starting the download process.
- ❒ The access point automatically disables the OneConnect Onboarding service if it is not registered with the service.
- ❒ OneConnect Onboarding uses SZTP, NTP, DHCP, and DNS to contact its cloud-based server.

For information on Allied OneConnect Onboarding, consult your Allied Telesis Partner or refer to the *Allied* OneConnect Onboarding *Installation Guide* on the Allied Telesis web site.

613-003247 Rev H

Physical Description

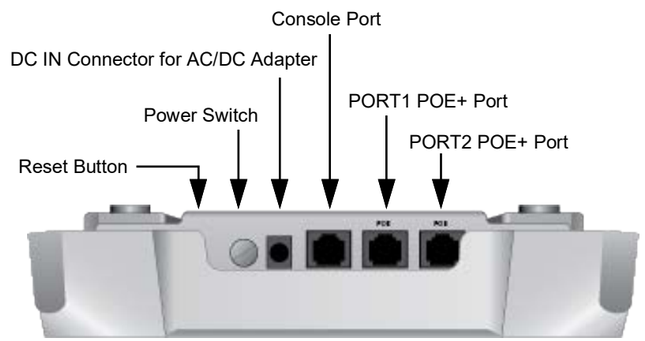

The console serial port on the TQ7403 model is for manufacturing purposes only.

For the TQ7403-R device, you can access the AlliedWare Plus™ operating system through the Console port and configure the device.

Safety Precautions and Site Requirements

Review the safety precautions and site requirements in the *Installation Guide: TQ7403 Wireless Access Point* before installing the device.

Package Contents

TQ7403 Series Access Point	
Two 2.4GHz/5GHz dual band external antennas	
One Mounting Bracket	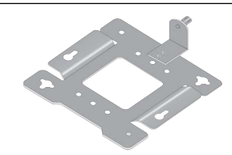
Two M5 x 4.5 mm, Pan-head Screws	

If any item is missing or damaged, contact your Allied Telesis sales representative for assistance. Retain the original shipping material to return the unit to Allied Telesis.

Installation Options

You can install the access point on a desktop, celling, or wall. See the approved and unapproved orientations:

Desktop

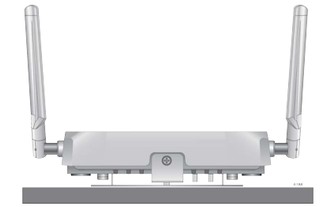

Ceiling

Wall

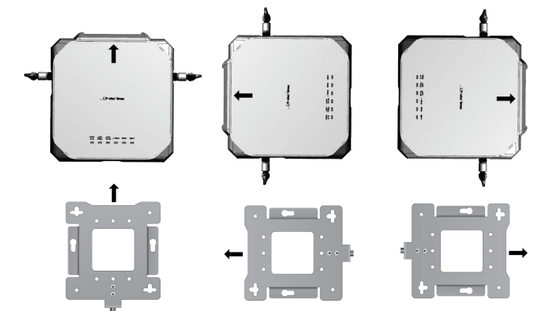

Do not install the access point facing down.

Attaching the External Antenna

1. Place the access point on a level, secure surface.
2. Align the antenna to the antenna connector on the side of the access point.

3. Screw the antenna onto the antenna connector.

4. Bend the antenna to adjust the position.

5. Repeat the procedure to attach the other antenna to the other side of the access point.

Pre-fitting the Mounting Bracket

Before installing the mounting bracket on a wall or ceiling, pre-fit the bracket to the access point.

1. Install the two screws (provided) fully into the bottom panel of the access point.

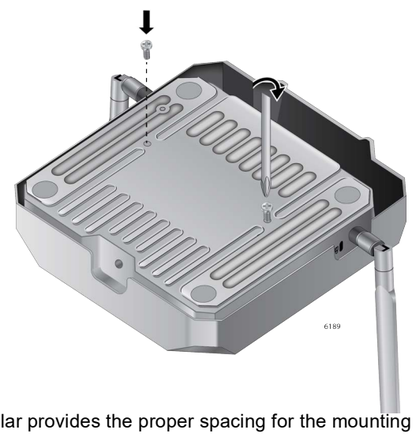

The screw collar provides the proper spacing for the mounting bracket beneath the screw head.

2. Make sure that the mounting bracket fits to the access point by sliding the bracket beneath the screws.

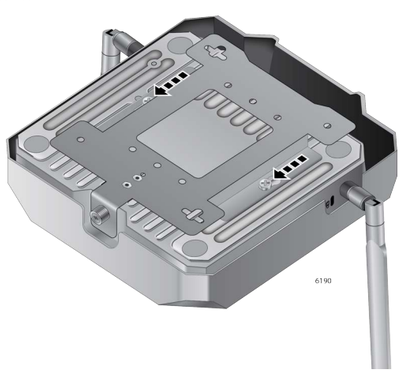

3. Slide the mounting bracket forward and remove it from the access point.

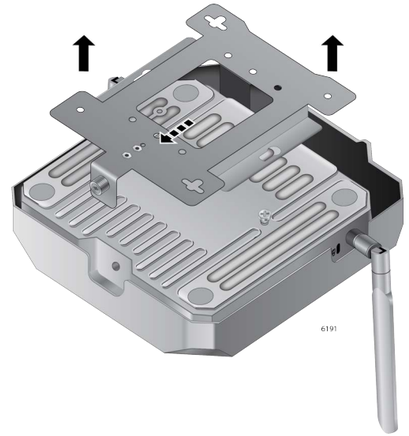

Installing the Mounting Bracket on a Wall or Ceiling

1. Choose a location and orientation for the access point on the wall or ceiling.
2. Position the mounting bracket at the selected location for the access point. With a pencil, mark the two key-hole slots on the wall or ceiling.

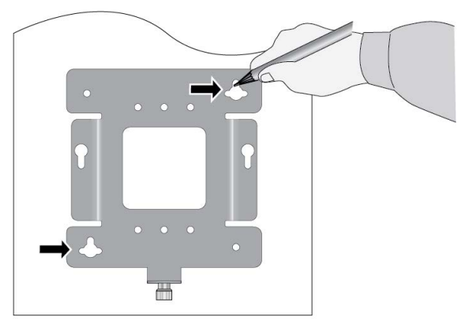

3. If necessary, pre-drill on the wall or ceiling the two marked locations of the key-hole slots for the screws.
4. Install two M4 screws and anchors (if required) into the wall or ceiling. Leave the screws loose enough so that you can slide the bracket under the screw heads.

   For wooden walls or ceiling, Allied Telesis recommends M4 25 mm flat-head wood screws and anchors (if required). The screws and anchors are not provided.

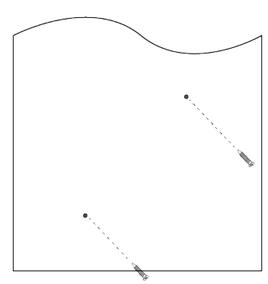

5. Install the openings of the bracket key-hole slots to the two screw heads and slide the bracket into the narrow end of the key-hole slot openings.

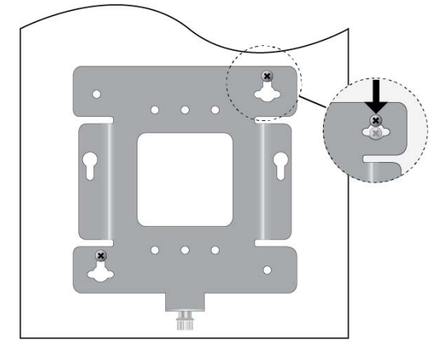

6. Tighten the screws snugly onto the bracket.

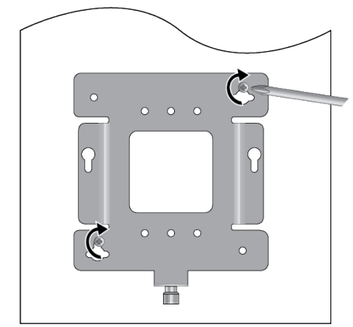

7. To secure the mounting bracket, pre-drill holes through the two bracket mounting holes opposite the key-hole slots.
8. Install and tighten two M4 screws (not provided).

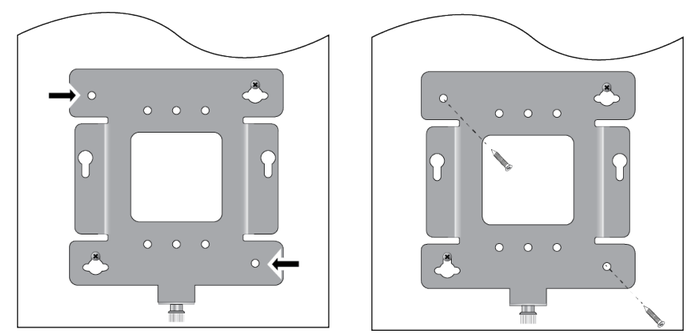

Cabling the Wireless Access Point

Perform the following procedure to cable the Ethernet LAN port and to power the device:

1. Connect an Ethernet cable to PORT1 (POE).

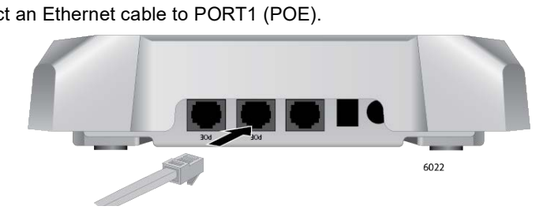

2. Connect the other end of the Ethernet cable to a network device, such as a switch or router.

Note

When PORT1 is connected to PoE+ power sourcing equipment, the TQ7403 access point powers on and begins to initialize its management software.

3. To use PORT2 in the static LAG or Cascade mode, connect a second Ethernet cable to PORT2.

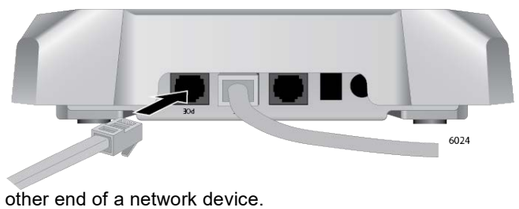

4. Connect the other end of a network device.

   To use PORT2 as a static LAG with PORT1, connect PORT2 to the same switch or router as PORT1. To use it in the Cascade mode, connect PORT2 to a different device.

Note

The default setting for PORT2 is disabled. To enable the port, use the web management interface. For more details, see the *TQ7403 Management Software User Guide*.

Note

Do not enable the PORT2 until you have configured the other network device for the static LAG.

Powering the Wireless Access Point

The access point can be powered with PoE+ on the PORT1 or/and PORT2 ports, an external AC/DC power adapter, or both. The access point that is powered by both PoE and an external power adapter uses the adapter as its primary power and PoE as redundant power.

Allied Telesis recommends the PWRADP-01 (DA-48Z12) AC/DC Power Adapter. The power adapter should be ordered separately.

1. Plug the DC connector into the DC IN jack on the access point.

2. Connect the power adapter into an appropriate AC power source.
3. Turn on the Power Switch on the panel.

Note

The power switch on the access point controls power from the AC power supply. It does not control PoE+ on PORT1 and PORT2.

Installing the Access Point on the Wall Mounting Bracket

1. Align the bottom of the access point over the bracket so that the two screws on the bottom of the device fit into the bracket keyholes.

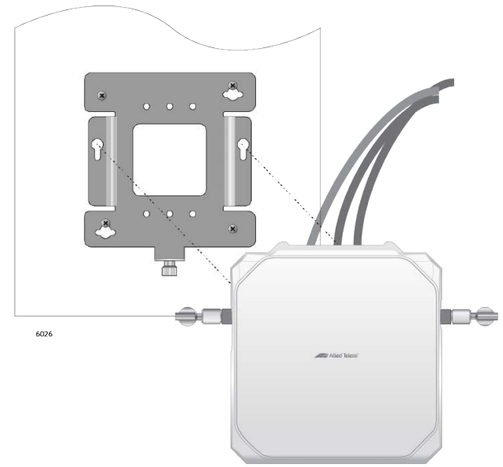

2. Slide the access point forward until its screws are seated in the bracket keyhole slots and the bracket thumbscrew is aligned with the screw hole on the front panel.
3. Tighten the thumbscrew to secure the access point to the wall mounting bracket.

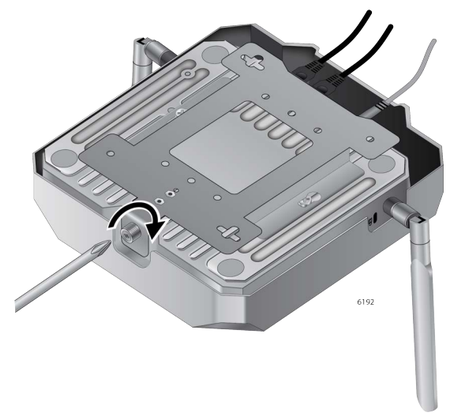

4. Place the Ethernet cable(s) and power cable (if any) along the cable guides inside of the top cover in the cable hiding space.

Starting the Initial Management Session

The access point firmware includes a DHCP client. The default setting for the client is enabled. When you power on the access point for the first time, it queries the subnet on PORT1 for a DHCP server. If a DHCP server responds to its query, the unit uses the IP address the server assigns to it.

To start the initial management session, perform the following procedure:

1. Start the web browser on your management workstation.
2. Enter the IP address of the wireless access point in the URL field of the web browser. The address is one of the following:

If your network does not have a DHCP server, enter the default address:

- ❒ The default address for the TQ7403 is 192.168.1.230
  - ❒ The default address for the TQ7403-R 192.168.1.1

If your network has a DHCP server, enter the IP address the DHCP server assigned to the access point.

The wireless access point displays the login prompt.

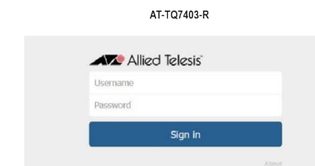

3. Enter “manager” for the username and “friend” for the password.
   The username and password are case-sensitive.

Starting a Local Management Session

Note
This section is for the TQ7403-R model only.

The TQ7403-R device can be configured through a local session from the Console port, in addition to the web-based Graphical User Interface (GUI).

To start a local management session, perform the following procedure:

1. Connect the RJ-45 end of the management cable to the Console port on the TQ7403-R device.
2. Connect the other end of the cable to an RS-232 port on a terminal or personal computer with a terminal emulation program.
3. Configure a terminal or terminal emulation program as follows:
   - ❒ Baud rate: 115200 bps
   - ❒ Data bits: 8
   - ❒ Parity: None
   - ❒ Stop bit: 1
   - ❒ Flow controller: None
   - ❒ Emulation: VT100

Note
The port settings are for a DEC VT100 or ANSI terminal, or an equivalent terminal emulator program.

4. Press Enter. You are prompted for a username and password.
5. Enter “manager” for the username and “friend” for the password. The username and password are case-sensitive.

The local management session starts, and the command prompt shows the following:

```
awplus>
```

The prompt shows the AlliedWare™ Plus operating system is installed on the TQ7403-R device.

Setting the Country Setting

The non-US model of this product has a country code setting that must be set during the initial management session of the unit. The setting ensures that the unit operates in compliance with the laws and regulations of your country or region.

The country code for the US model is preset and cannot be changed. Per FCC regulations, the country code setting for all WiFi products marketed in the US must be fixed to US operational channels only.

LEDs

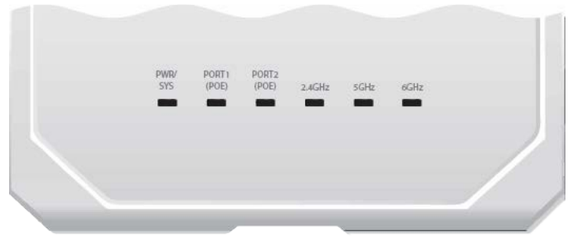

The top panel LEDs are described in this table.

LED	State	TQ7403-R	TQ7403
PWR/ SYS	Green	The access point is powered ON and operating normally.	
	Blinking Green	N/A	The access point is booting up.
	Red	TQ7403-R is booting up.	The access point has encountered an error.
	Blinking Red	N/A	The access point is upgrading its firmware.
	Off	The access point is not receiving power.	
PORT1 (PoE)	Green	The port has established a link to a network device.	
	Blinking Green	The port is transmitting or receiving data.	
	Off	The port has not established a link to a network device.	
PORT2 (PoE)	Green	The port has established a link to a network device.	
	Blinking Green	The port is transmitting and receiving data.	
	Off	The port has not established a link to a network device.	
2.4GHz	Green	The 2.4GHz radio is enabled.	
	Off	The 2.4GHz radio is disabled.	

Optional Patch Antenna and Extension Cable

Allied Telesis offers the optional TQ0301 dual-band patch antenna with four 2-meter long cables. In addition, you can use the TQ0064 10-meter RF extension cable with the TQ0301 antenna. To use the TQ0301 antenna and TQ0064 cable, you must purchase them in addition to the access point.

TQ0301 Dual-band Patch Antenna Package Contents

Dual-band Patch Antenna (Bracket Assembly attached)	
Four Cables (2 m)	
Four SMA to N jack conversion adapters	
Two metal protective caps	

TQ0064 Extension Cable Package Content

10 meter Cable	

Attaching the Cables to the TQ0301 Patch Antenna

Allied Telesis offers two types of cables for the TQ0301 patch antenna: 2-meter cable that comes with the TQ0301 and TQ0064 10-meter cable.

Installing the TQ0301 Patch Antenna on a Pole

The TQ0301 patch antenna can be mounted on a pole with the pole-mount brackets.

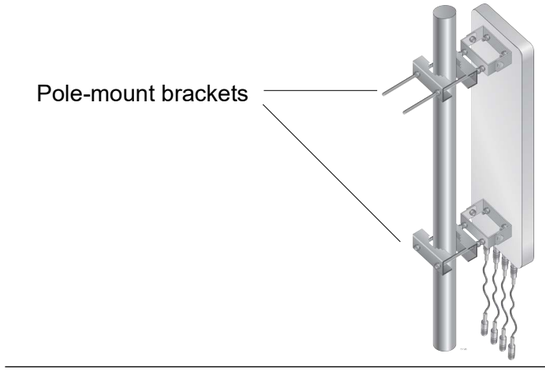

Note
The TQ0301 patch antenna must be installed with the cable connectors facing down.

1. Remove the connector blind caps covering the antenna connectors.
2. Attach the N-Jack adapters to the 2-meter cables.
3. Screw the cables to the antenna connectors.
4. Attach the metal protective cap on unused antenna connector.

Configurations with the TQ0301 Patch Antenna

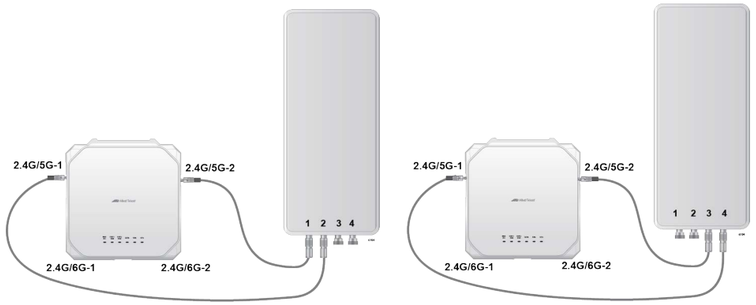

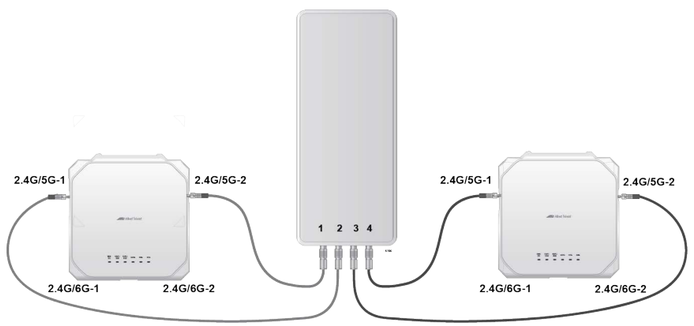

Attaching the Cable to the Access Point

1. Attach the N-Jack conversion adapter to the connector where the antenna was attached.
2. Screw the cable connector onto the N-Jack conversion adapter.

Product Specifications

The product specifications are listed in the following tables.

Parameter	Specification
Dimensions (W x D x H) without external antennas	200 mm X 210 mm X 45 mm (7.9 in. x 8.3 in. x 1.8 in.)
Dimensions (W x D x H) with external antennas	270 mm X 210 mm X 160mm (11 in. x 8.3 in. x 6.3 in.)
Weight with external antennas	1.2 kg (2.6 lbs)

Parameter	Specification
Operating Temperature	0° C to 50° C (32° F to 122° F)
Storage Temperature	- 25° C to 70° C (- 13° F to 158° F)
Operating Humidity	5% to 90% non-condensing
Storage Humidity	0% to 95% non-condensing
Maximum Operating Altitude	3000 m (9843 ft)

PoE+ Power Spec on LAN Ports	Specification
Maximum Power Consumption	24.1 watts
Rated Voltage	DC 48 V
Rated Current	0.67 A

External AC/DC Power Adapter Spec	Specification
Input Voltage Range	100~240 VAC
Input Frequency	50 - 60 Hz
Rated Output Voltage	+12 VDC
Rated Output Current	4 A
Temperature Ranges	0° C to 50° C (32° F to 122° F)
Maximum Operating Altitude	3000 m (9843 ft)

Conformity and Regulatory Information

This device complies with Part 15 of FCC Rules, Directive 2014/53/EU issued by the Commission of the European Community, some other safety, electromagnetic emission, and radio certificates.

The operating frequencies and maximum transmission power levels for wireless devices operated in the EU & UK are listed below:

EU	Model: AT-TQ7403-R						
MHz	2412-2472	2412-2472 (BLE)	2412-2472 (Zigbee)	5150-5250	5250-5350	5470-5725	5925-6425
Beamforming (dBM)	19.99			22.88	22.98	29.95	22.89
Non-Beamforming (dBm)	19.99	12.00	13.19	22.98	22.98	29.95	22.98
* This equipment should be installed and operated with a minimum distance of 20 cm between the radiator and your body.							

UK	Model: AT-TQ7403, AT-TQ7403-R						
MHz	2412-2472	2412-2472 (BLE)	2412-2472 (Zigbee)	5150-5250	5250-5350	5470-5725	5925-6425
Beamforming (dBM)	19.99			22.88	22.98	29.95	22.89
Non-Beamforming (dBm)	19.99	12.00	13.19	22.98	22.98	29.95	22.98

* This equipment should be installed and operated with a minimum distance of 20 cm between the radiator and your body.

Note

Contact Allied Telesis for the EU conformity statement. To contact Allied Telesis, visit the web site at **www.alliedtelesis.com/contact**.

เครื่องวิทยุคมนาคมนี้มีระดับการแผ่คลื่นแม่เหล็กไฟฟ้าสอดคล้องตามมาตรฐานความปลอดภัยต่อสุขภาพของมนุษย์จากการใช้เครื่องวิทยุคมนาคมที่คณะกรรมการกิจการโทรคมนาคมแห่งชาติประกาศกำหนด

กสทช.

เครื่องวิทยุคมนาคมนี้ ได้รับยกเว้น ไม่ต้องได้รับใบอนุญาตให้มี ใช้ซึ่งเครื่องวิทยุคมนาคม หรือตั้งสถานีวิทยุคมนาคมตามประกาศ กสทช. เรื่อง เครื่องวิทยุคมนาคม และสถานีวิทยุคมนาคมที่ได้รับยกเว้นไม่ต้องได้รับใบอนุญาตวิทยุคมนาคมตามพระราชบัญญัติวิทยุคมนาคม พ.ศ. 2498

กสทช. | โทรคมนาคม
กำกับดูแลเพื่อประชาชน
Call Center 1200 (โทรฟรี)

Singapore IMDA TS SRD

Complies with IMDA Standards DB102434

Copyright © 2026 Allied Telesis, Inc.

All rights reserved. No part of this publication may be reproduced without prior written permission from Allied Telesis, Inc.

Allied Telesis and the Allied Telesis logo are trademarks of Allied Telesis, Incorporated. All other product names, company names, logos or other designations mentioned herein are trademarks or registered trademarks of their respective owners.

Allied Telesis, Inc. reserves the right to make changes in specifications and other information contained in this document without prior written notice. The information provided herein is subject to change without notice. In no event shall Allied Telesis, Inc. be liable for any incidental, special, indirect, or consequential damages whatsoever, including but not limited to lost profits, arising out of or related to this manual or the information contained herein, even if Allied Telesis, Inc. has been advised of, known, or should have known, the possibility of such damages.